LAND USE BOARD
BOROUGH OF ALLENDALE
Municipal Building
500 West Crescent Ave.
Allendale, NJ

The Regular Meeting of the Allendale Land Use Board will be held in the Council Chambers in the Allendale Municipal Building, 500 West Crescent Avenue, 2nd Floor, Allendale, NJ 07401 on April 18, 2022 at 7:30 p.m. Formal action will be taken.

I. CALL TO ORDER
A. Open Public Meetings Act Announcement
B. Salute to Flag

II. ROLL CALL

III. APPROVAL OF MINUTES
March 14 and March 16, 2022 Land Use Board Regular Meetings

IV. RESOLUTIONS:
Application File No: LUB 2022-08
Resolution No.: 22-14
Applicant: Peter & Lindsay Doris
Address: 72 Homewood Road
Block: 2004 Lot: 30
Proposed: Second floor dormer to include a bathroom and walk-in closet, Pursuant to Sec. 270-37A

Application File No: LUB 2022-06
Resolution No.: 22-15
Applicant: Minaris Regenerative Medicine
Address: 75 Commerce Drive, Allendale, NJ 07401
Block: 702 Lot: 17
Proposed: Preliminary & Final Minor Site Plan review to install various entrance/exits on the existing building, construct a cold storage and waste holding enclosure, install HVAC equipment, install a roll-up lock door as well as other associated interior/exterior site improvements.

V. PUBLIC HEARINGS:
Application File No: LUB 2022-07
Applicant: Marc & Bridget Adler
Address: 22 Bonnie Way
Block: 201 Lot: 14
Proposed: Addition of new recreation room, office, expanded kitchen, deck and new pool cabana. Pursuant to Sec. 270-64(A)
(carried from the meeting of March 16, 2022)

Application File No: LUB 2022-09
Applicant: Vincent Pergola & Anna Peterson
Address: 38 E. Crescent Avenue, Allendale, NJ 07401
Block: 511 Lot: 7
Proposed: Two story addition, adding a car port and expanding the driveway. Pursuant to 270-37, 270-54C, 270-54B & 270-54A

Application File No: LUB 2022-10
Applicant: Shoaeb Raziuddin & Shaziya Shaikh
Address: 109 E. Orchard Street, Allendale, NJ 07401
Block: 1901 Lot: 10
Proposed: New single family dwelling with walk out basement, driveway, walkway, rear patio and in ground swimming pool with patio surround. Pursuant to 270-64 B(2) and 270-54A

VI. OPEN TO THE PUBLIC FOR COMMENT

VII. OTHER

VIII. ADJOURNMENT

AGENDA & AGENDA MATERIALS SUBJECT TO CHANGE

Borough Website
Bulletin Board

RESOLUTION
LAND USE BOARD
BOROUGH OF ALLENDALE
BERGEN COUNTY, NJ

DATE: April 18, 2022

RESOLUTION: 22-14

Land Use Board	Motion	Second	Yes	No	Abstain	Absent
Bergen						
Daloisio						
Davis						
Kistner						
Lovisolo						
Yaccarino						
Sirico						
Bernstein						
Quinn						
Forbes - Alt. #1						
Putrino – Alt. #2						

Carried☐ Defeated ☐ Tabled ☐

RESOLUTION 22-14

LAND USE BOARD OF THE BOROUGH OF ALLENDALE
RESOLUTION APPROVING
APPLICATION FOR VARIANCE FOR
PETER & LINDSEY DORIS
BLOCK 2004, LOT 30
(a/k/a 72 HOMEWOOD AVENUE)

WHEREAS, the applicants, PETER & LINDSEY DORIS, the owners of the property located at 72 Homewood Avenue, known as Block 2004, Lot 30 on the Tax Map, in the Borough of Allendale, County of Bergen and State of New Jersey, applied to the Land Use Board of the Borough of Allendale in an application dated February 9, 2022 for approval of variance relief for a proposed addition and renovations to the premises, which is located in the A residential zone, from the Allendale Code, Zoning; and

RESOLUTION
LAND USE BOARD
BOROUGH OF ALLENDALE
BERGEN COUNTY, NJ

DATE: April 18, 2022

RESOLUTION: 22-14

WHEREAS, variance relief is necessary since the property is pre-existing non-conforming, and the proposed addition/renovation requires variance relief from bulk standards in the Allendale Code; and

WHEREAS, the application and plans specifically seek approval to construct an addition and renovations to the existing dwelling, including a second story shed dormer addition above the existing structure in the rear of the house; and

WHEREAS, the application seeks specific variance relief for front yard, rear yard, side yards, lot size, lot width, floor area ratio ("FAR") and addition to a non-conforming structure; and

WHEREAS, the Land Use Board considered the matter at the March 16, 2022 regular meeting of the Land Use Board at which time the applicants personally appeared and testified;

NOW THEREFORE BE IT RESOLVED by the Borough of Allendale Land Use Board that it hereby makes the following findings of fact and conclusions:

1. Notice of the public hearing was properly given by the applicant in accordance with applicable law.

2. The property is located at 72 Homewood Avenue, known as Block 2004, Lot 30, on the Tax Map of the Borough of Allendale. The property is located in the A residential zone. The application was in evidence.

3. As part of the application, the applicant submitted a survey entitled, "Map of Property Of Donald T. Hsieh & Mary Ann Hsieh". The applicant also submitted architectural plans entitled, "Peter & Lindsay Doris, 72 Homewood Avenue, Allendale, New Jersey", prepared by Christopher J. Greimel, PE, PR, PP consist of two (2) sheets and are dated January 30, 2022. The application and various photogrghs and diagrams were also submitted as part of the application.

4. Borough Engineer, Michael Vreeland, P.E. reviewed the submissions by the applicant and prepared a Memorandum dated March 8, 2022. The Memorandum was in evidence and reviewed and examined by the members of the Land Use Board.

5. Variance relief is required because this property located in the A residential zone and has pre-existing, non-conforming conditions, due to the undersized lot condition and undersized lot width, structure in place, and proposed addition, as follows:

> §270-57B D E & F – Front Yard, Rear Yard, Lot Area and Width. The plans indicate the existing dwelling encroaches: ±14 ft into the required 35 ft front yard and ±6 ft into the required 50 ft rear yard. The existing lot is undersized. The plans indicate the lot is 11,000 sf less than the required 20,000 sf area and 40 ft less than the required 115 ft width. The subject application does not alter these conditions.
>
> §270-63A(1) – Floor Area Ratios. The plans indicate the existing FAR exceeds the allowable 25% FAR by ±2.7%. The proposal increases the GBA and will exceed the allowable 25% FAR by ±4.7%.
>
> §270-64C(1) – Side Yard Setbacks. The proposal triggers the enhanced side yard requirement. The dwelling will encroach ±5.1 ft into the required ±16.1 ft side yard setback.
>
> §270-37A(4) – Additions to Nonconforming Structures. Alteration and improvements are proposed above existing nonconformities (i.e., encroachments into required yard areas).

6. The subject property is currently developed with a single family dwelling, detached garage and associated amenities. The application and plans propose to construct and addition and renovation to the existing dwelling (including a second story shed dormer over the existing footprint). The subject property is located within Allendale's A (Residential) Zone. The Applicant is seeking variance relief for conflicts with §270-63A(1), §270-64C(1) and §270-37A of the Code.

7. The applicants were sworn and testified as to the existing conditions of the property. They testified that the lot was undersized and the lot width was undersized. The proposed addition/renovation would consist of adding a shed dormer to the back of the house to accommodate a new bathroom and walk-in closet. The addition/renovation was contemplated to upgrade the home and better accommodate their family. Any improvements on the property would require variance relief, due to the pre-existing non-conforming conditions. It was noted that the property is in an older section of the Borough with a severely undersized lot, and the addition was *de minimus,* consisting of only 150 square feet. The addition would not be visible from the front of the house or the street, and it would have no impact on neighbors or any surrounding properties. There will be no exterior lighting added to the premises. The applicants testified that there was adequate screening on the side of the property with existing landscaping, and that the application did not call for the removal of any existing buffer screening or trees on the property. The addition would be aesthetically pleasing to the property, and consistent with the existing style and design

of the premises, functional for the family and shielded from neighbors by existing vegetation which would remain.

8. Borough Engineer, Michael Vreeland, P.E. reviewed the submissions by the applicant and prepared a Memorandum dated March 8, 2022. The Memorandum was in evidence and reviewed and examined by the members of the Land Use Board. Mr. Vreeland also provided testimony relative to the application to the Land Use Board. Mr. Vreeland testified that the proposed addition would have no impact on surrounding properties. The applicant specifically agreed to incorporate the recommendations of the Borough Engineer's review letter and testimony into the renovation plans.

9. No members of the public appeared in connection with the application.

BE IT FURTHER RESOLVED, based upon the factual and legal evidence, testimony and contentions set forth herein, that the Allendale Land Use Board hereby grants the applicant's request for a variance relief, and to permit the addition and renovations as proposed in the application; and

BE IT FURTHER RESOLVED that the Allendale Land Use Board hereby determines that the variance hereby granted constitutes a "hardship" variance under N.J.S.A. 40:55 D-70C.(1); and

BE IT FURTHER RESOLVED that the Allendale Land Use Board specially adopts and accepts the testimony of the applicants and the Borough Engineer, in connection with the testimony that the applicant is entitled to a variance, due to the unique nature of the property, namely the undersized condition and undersized width of the lot relative to the Code and the A Zone (N.J.S.A. 40:55 D-70C.(1)), which are all deemed hardships by the Board. In addition, the hardships associated with the present condition of the property and premises outweigh the negative criteria to the Borough zoning ordinances and the zone plan and neighborhood. Further, the addition will

be *de minimus*, and will not be obtrusive due to the placement in the rear of the premises, and the location of the proposed improvements and encroachments; and

BE IT FURTHER RESOLVED that the Allendale Land Use Board hereby grants approval of the requested variance, subject to the following conditions, which shall be complied with prior to the issuance of a construction permit:

A. All fees and assessments required by ordinances, and due and owing to the Borough of Allendale for this site for professional review and approval of the applicant's plans, shall be paid in full to the Borough of Allendale by the applicant.

B. Applicants and their professionals shall work with the Borough Engineer in the event that any field adjustments shall be required for the proper construction of the proposed addition, so as not to negatively impact any surrounding properties, and comply with Mr. Vreeland's March 8, 2022 review letter.

BE IT FURTHER RESOLVED construction shall proceed in accordance with this Resolution, the approved plans and drawings marked in evidence, the testimony of the applicant in accordance with all applicable State, County and Municipal codes, ordinances, rules and regulations.

BE IT FURTHER RESOLVED that the Land Use Board Secretary shall mail a copy of this Resolution within ten days from the date of adoption thereof to the applicant or to their attorney, if any, without charge; and to all other persons who request the same and pay the required fee therefore. The Secretary shall also file a copy of this Resolution in the offices of the Borough Clerk, Building Inspector, Construction Code Official, Tax Assessor and the Borough Attorney and shall publish a brief notice of the decision in the official newspaper, the cost of which shall be paid for by the applicant.

RESOLUTION
LAND USE BOARD
BOROUGH OF ALLENDALE
BERGEN COUNTY, NJ

DATE: April 18, 2022

RESOLUTION: 22-14

Approved:

ALLENDALE LAND USE BOARD

_____
KEVIN QUINN, Chairman

Attest:

_____
JOSEPH DALOISIO, SECRETARY

Adopted: April 18, 2022

ADLER RESIDENCE

22 BONNIE WAY, ALLENDALE, NJ

DRAWING LIST

SK-1 TITLE SHEET
SK-2 PROPOSED BASEMENT PLAN
SK-3 1ST FLOOR DEMO PLAN
SK-4 PROPOSED FIRST FLOOR
SK-5 PROPOSED SECOND FLOOR
SK-6 PROPOSED ROOF PLAN
SK-7 PROPOSED EXTERIOR ELEVATIONS
SK-8 PROPOSED EXTERIOR ELEVATIONS
SK-9 PROPOSED CABANA PLANS
SK-10 PROPOSED CABANA ELEVATIONS
SK-11 EXISTING PHOTOS
SK-12 EXTERIOR VIEWS
SK-13 EXTERIOR VIEWS

PROJECT DESCRIPTION

ADDITION AND RENOVATION TO
EXISTING SINGLE-FAMILY RESIDENCE

CONSTRUCTION OF A NEW CABANA.

1 FRONT

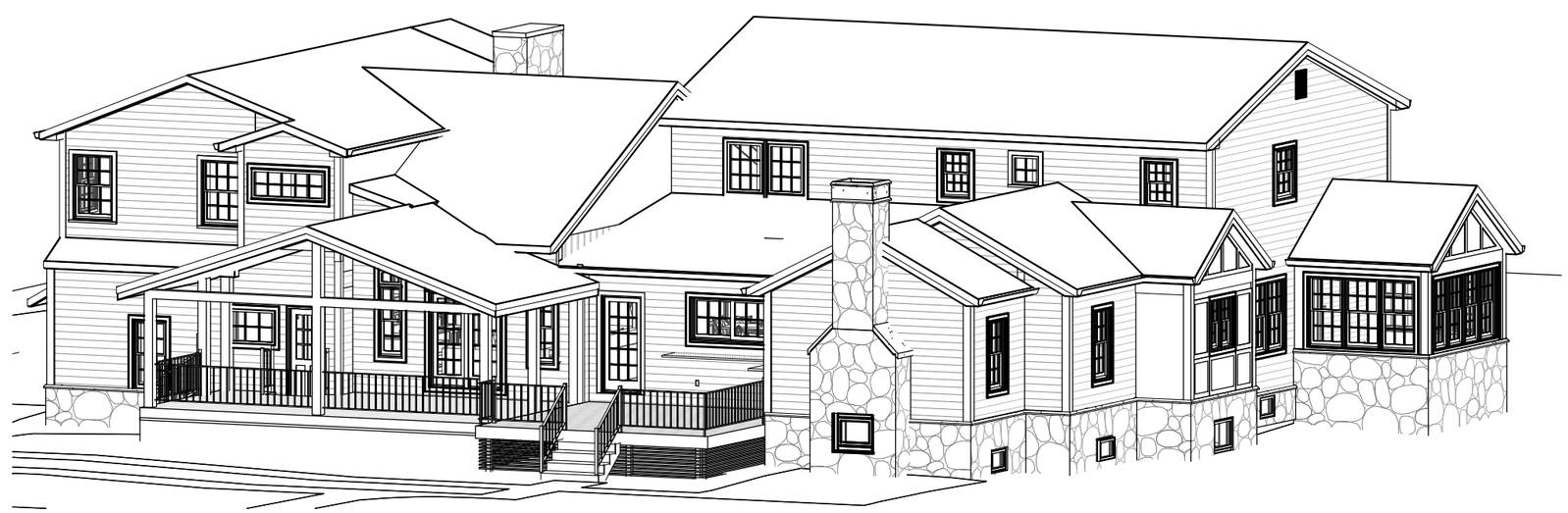

2 REAR

PROGRESS PRINTS
NOT FOR CONSTRUCTION

ZA ARCHITECTS LLC
240 W. CRESCENT AVE., SUITE D
ALLENDALE, NJ 07401
T: 201.785.8855 F: 201.785.8866

MARY FITZPATRICK SCRO, ARCHITECT
LICENSE # 21AI01591800

ZONING BOARD APPLICATION

PROJECT #: 2119
PROJECT: ADLER RESIDENCE
22 BONNIE WAY
ALLENDALE, NJ

TITLE: TITLE SHEET
DATE: 04/01/22
SCALE:

DRAWING #: SK-1

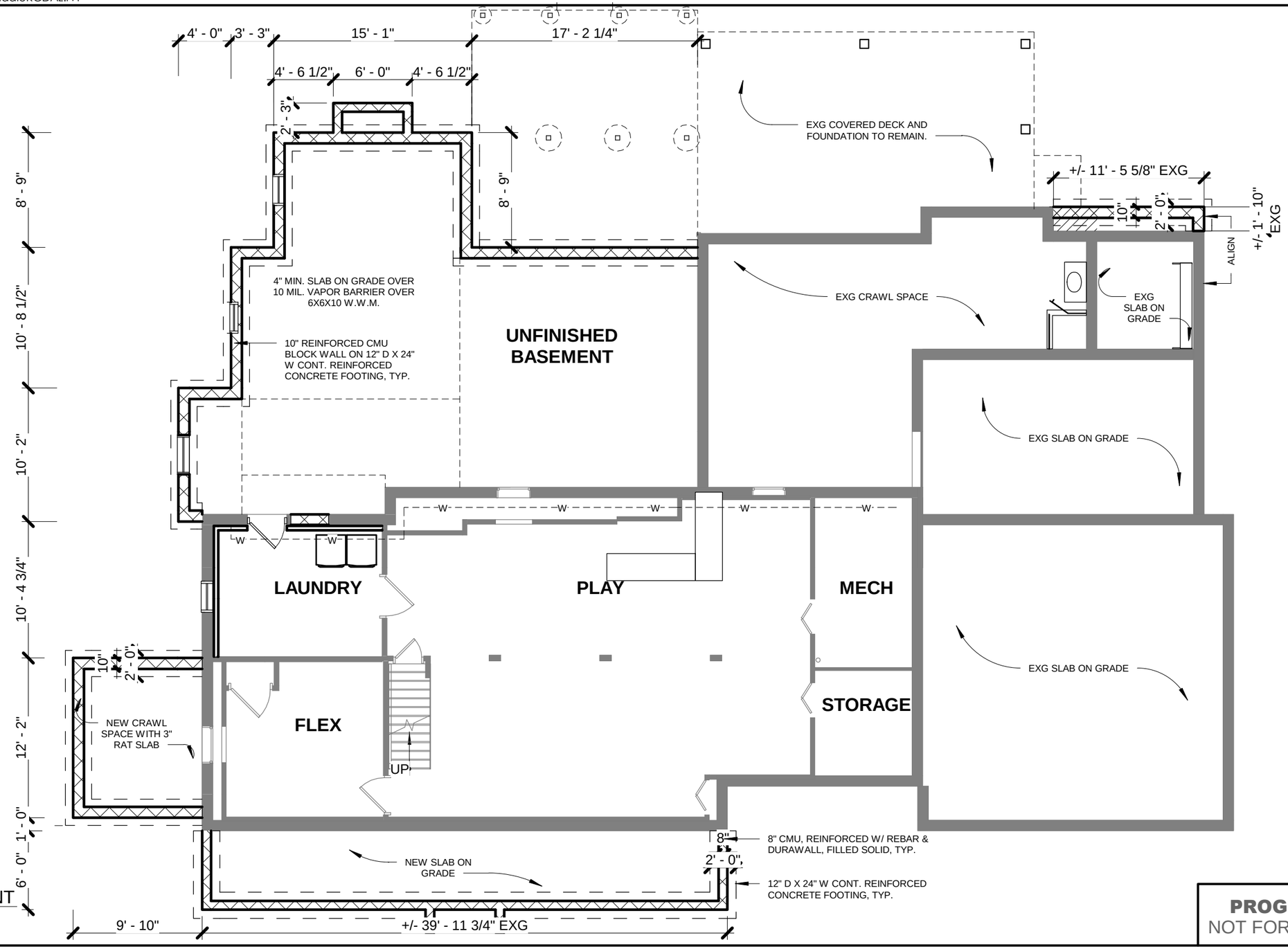

LEGEND

EXISTING WALL TO REMAIN

NEW WALL CONSTRUCTION

1 PROPOSED BASEMENT
1/8" = 1'-0"

PROGRESS PRINTS
NOT FOR CONSTRUCTION

ZA ARCHITECTS LLC
240 W. CRESCENT AVE., SUITE D
ALLENDALE, NJ 07401
T: 201.785.8855 F: 201.785.8866

MARY FITZPATRICK SCRO, ARCHITECT
LICENSE # 21AI01591800

ZONING BOARD APPLICATION

PROJECT #: 2119
PROJECT: ADLER RESIDENCE
22 BONNIE WAY
ALLENDALE, NJ

TITLE: PROPOSED BASEMENT PLAN
DATE: 04/01/22
SCALE: 1/8" = 1'-0"

DRAWING #: SK-2

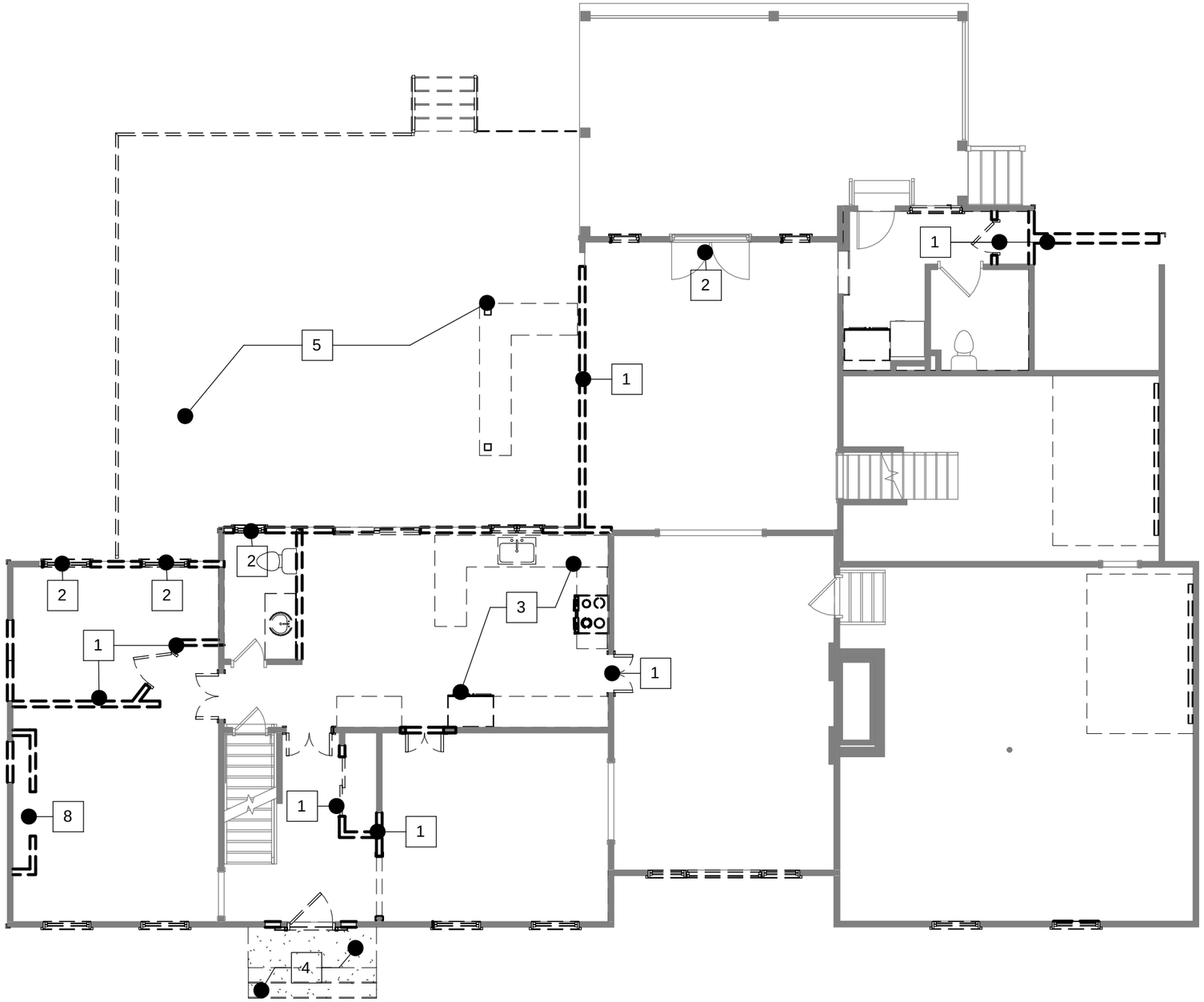

1 PROPOSED DEMO FLOOR PLAN
1/8" = 1'-0"

DEMOLITION LEGEND

1	REMOVE EXISTING WALL CONSTRUCTION AS INDICATED. TEMPORARILY SHORE STRUCTURE AS NECESSARY. SEE FLOOR PLAN FOR NEW CONFIGURATION AS REQUIRED.
2	REMOVE EXISTING DOOR/WINDOW AND INFILL/PATCH OPENING TO MATCH ADJACENT AS REQUIRED.
3	CAREFULLY REMOVE EXISTING KITCHEN IN ITS ENTIRETY, AND SAFELY STORE/PROTECT FOR RE-INSTALLATION. CAP AND SAFE ALL PLUMBING AND ELECTRICAL ELEMENTS AS REQUIRED.
4	REMOVE EXISTING DECK AND ASSOCIATED DECKING, RAILING, STEPS, STRUCTURE, AND SUPPORTING FOOTINGS.
5	REMOVE EXISTING PORCH AND ASSOCIATED STEPS, FOOTINGS, AND SLAB AS REQUIRED.
6	REMOVE EXISTING ROOF IN ITS ENTIRETY. TEMPORARILY SHORE STRUCTURE AS NECESSARY.
7	REMOVE EXG DROP CEILING AND CEILING TILES IN FINISHED BASEMENT.
8	REMOVE EXISTING FIREPLACE, CHIMNEY, MANTLE, AND ASSOCIATED ELEMENTS.

PROGRESS PRINTS
NOT FOR CONSTRUCTION

ARCHITECTS LLC
240 W. CRESCENT AVE., SUITE D
ALLENDALE, NJ 07401
T: 201.785.8855 F: 201.785.8866

MARY FITZPATRICK SCRO, ARCHITECT
LICENSE # 21AI01591800

ZONING BOARD APPLICATION

PROJECT #: 2119
PROJECT: ADLER RESIDENCE
22 BONNIE WAY
ALLENDALE, NJ

TITLE: 1ST FLOOR DEMO PLAN
DATE: 04/01/22
SCALE: As indicated

DRAWING #: SK-3

C:\Users\Addie\Documents\2119-Adler-CD_addieKCDAL.rvt

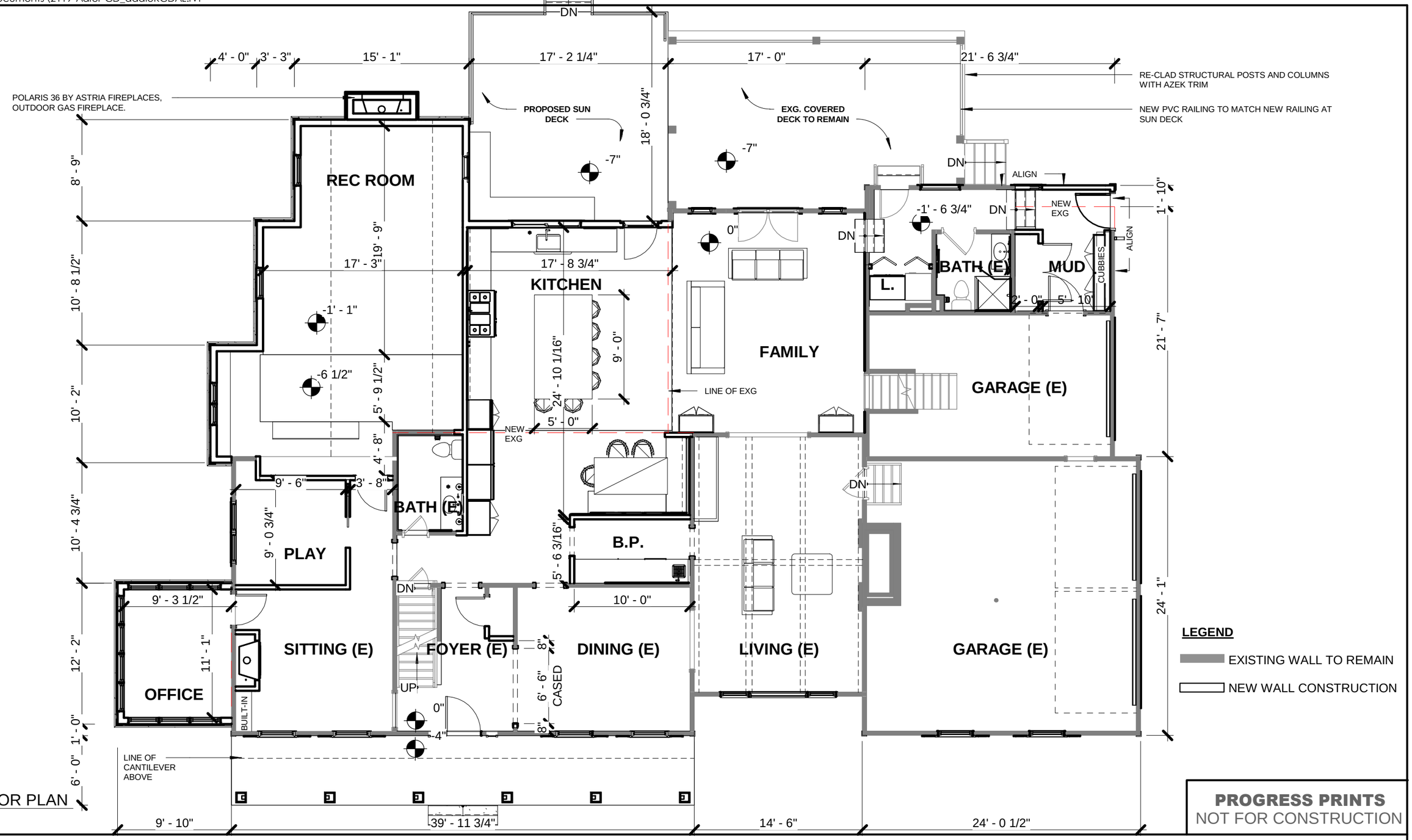

1 FIRST FLOOR PLAN
1/8" = 1'-0"

LEGEND

EXISTING WALL TO REMAIN

NEW WALL CONSTRUCTION

PROGRESS PRINTS
NOT FOR CONSTRUCTION

ZT ARCHITECTS LLC
240 W. CRESCENT AVE., SUITE D
ALLENDALE, NJ 07401
T: 201.785.8855 F: 201.785.8866

MARY FITZPATRICK SCRO, ARCHITECT
LICENSE # 21AI01591800

ZONING BOARD APPLICATION

PROJECT #: 2119
PROJECT: ADLER RESIDENCE
22 BONNIE WAY
ALLENDALE, NJ

TITLE: PROPOSED FIRST FLOOR
DATE: 04/01/22
SCALE: 1/8" = 1'-0"

DRAWING #: SK-4

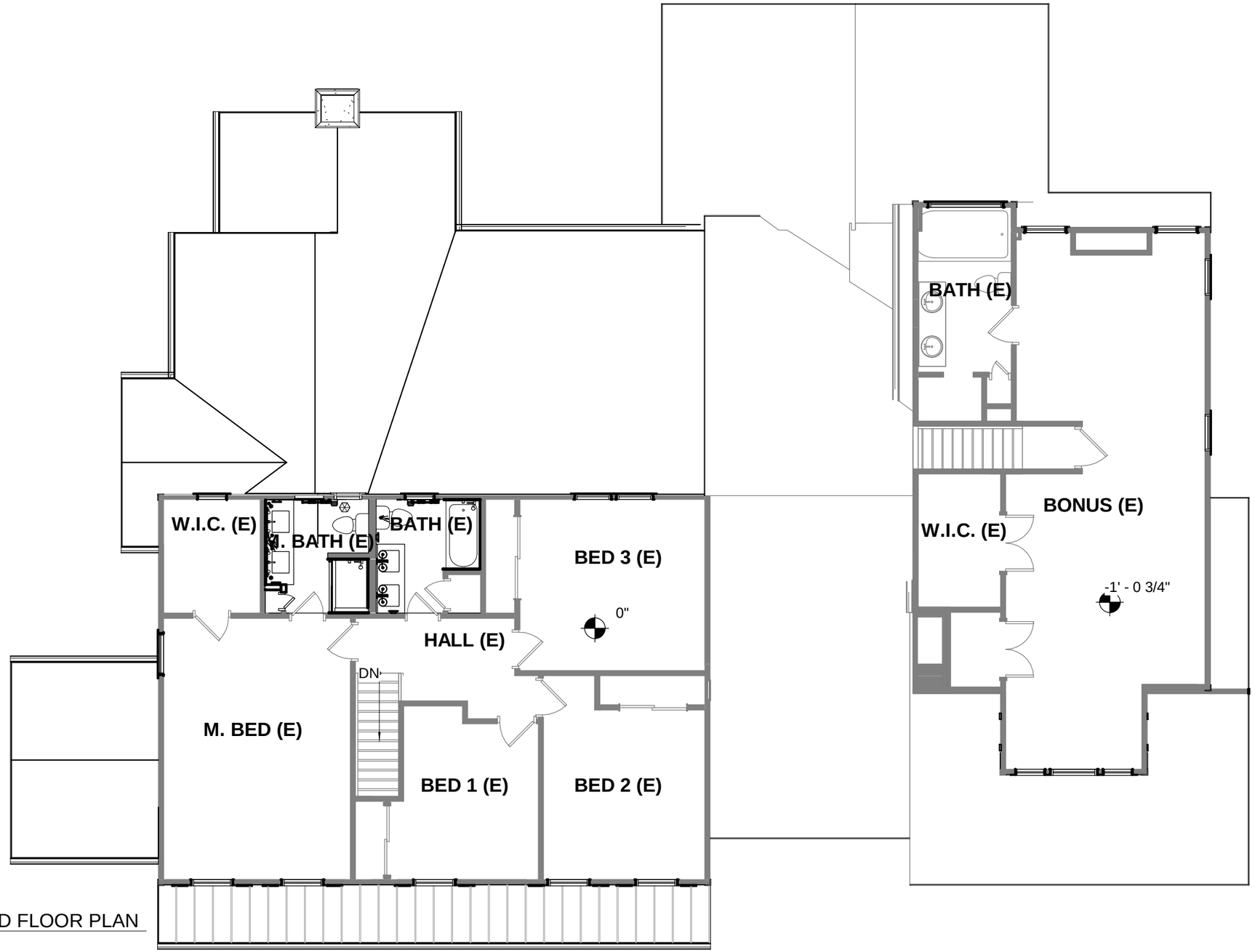

1 PROPOSED SECOND FLOOR PLAN
1/8" = 1'-0"

LEGEND

EXISTING WALL TO REMAIN

NEW WALL CONSTRUCTION

PROGRESS PRINTS
NOT FOR CONSTRUCTION

ZT ARCHITECTS LLC
240 W. CRESCENT AVE., SUITE D
ALLENDALE, NJ 07401
T: 201.785.8855 F: 201.785.8866

MARY FITZPATRICK SCRO, ARCHITECT
LICENSE # 21AI01591800

ZONING BOARD APPLICATION

PROJECT #: 2119
PROJECT: ADLER RESIDENCE
22 BONNIE WAY
ALLENDALE, NJ

TITLE: PROPOSED SECOND FLOOR
DATE: 04/01/22
SCALE: 1/8" = 1'-0"

DRAWING #: SK-5

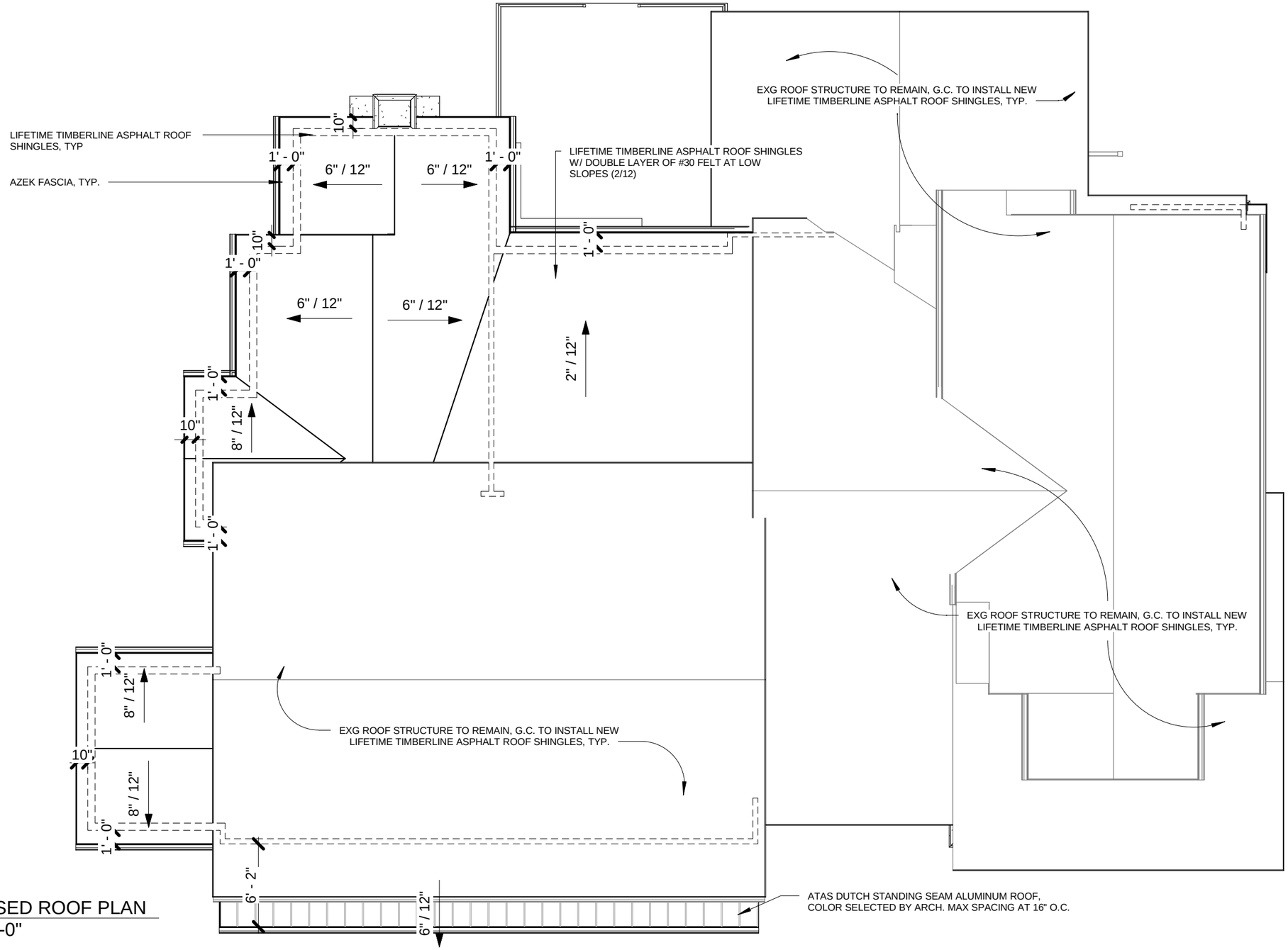

1 PROPOSED ROOF PLAN
1/8" = 1'-0"

PROGRESS PRINTS
NOT FOR CONSTRUCTION

ZT ARCHITECTS LLC
240 W. CRESCENT AVE., SUITE D
ALLENDALE, NJ 07401
T: 201.785.8855 F: 201.785.8866

MARY FITZPATRICK SCRO, ARCHITECT
LICENSE # 21AI01591800

ZONING BOARD APPLICATION

PROJECT #: 2119
PROJECT: ADLER RESIDENCE
22 BONNIE WAY
ALLENDALE, NJ

TITLE: PROPOSED ROOF PLAN
DATE: 04/01/22
SCALE: 1/8" = 1'-0"

DRAWING #: SK-6

1 FRONT ELEVATION
1/8" = 1'-0"

2 LEFT ELEVATION
1/8" = 1'-0"

PROGRESS PRINTS
NOT FOR CONSTRUCTION

ZA ARCHITECTS LLC
240 W. CRESCENT AVE., SUITE D
ALLENDALE, NJ 07401
T: 201.785.8855 F: 201.785.8866

MARY FITZPATRICK SCRO, ARCHITECT
LICENSE # 21AI01591800

ZONING BOARD APPLICATION

PROJECT #: 2119
PROJECT: ADLER RESIDENCE
22 BONNIE WAY
ALLENDALE, NJ

TITLE: PROPOSED EXTERIOR ELEVATIONS
DATE: 04/01/22
SCALE: 1/8" = 1'-0"

DRAWING #: SK-7

C:\Users\Addie\Documents\2119-Adler-CD_addieKCDAL.rvt

1 REAR ELEVATION
1/8" = 1'-0"

2 RIGHT ELEVATION
1/8" = 1'-0"

PROGRESS PRINTS
NOT FOR CONSTRUCTION

ZA ARCHITECTS LLC
240 W. CRESCENT AVE., SUITE D
ALLENDALE, NJ 07401
T: 201.785.8855 F: 201.785.8866

MARY FITZPATRICK SCRO, ARCHITECT
LICENSE # 21AI01591800

ZONING BOARD APPLICATION

PROJECT #: 2119
PROJECT: ADLER RESIDENCE
22 BONNIE WAY
ALLENDALE, NJ

TITLE: PROPOSED EXTERIOR ELEVATIONS
DATE: 04/01/22
SCALE: 1/8" = 1'-0"

DRAWING #: SK-8

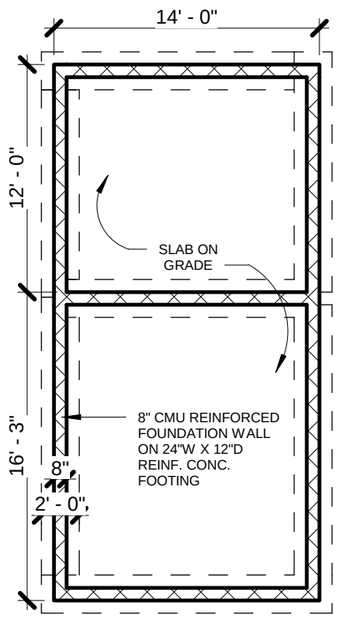

1 CABANA FOUNDATION PLAN
1/8" = 1'-0"

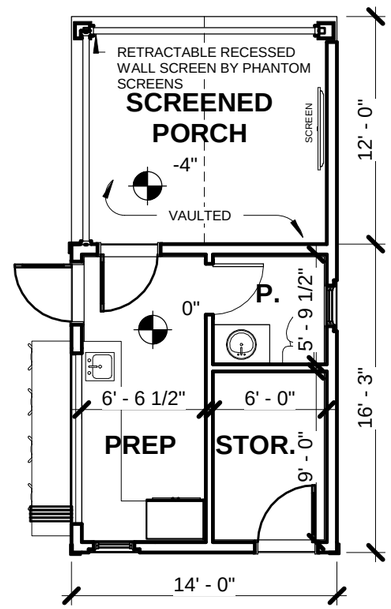

2 PROPOSED CABANA PLAN
1/8" = 1'-0"

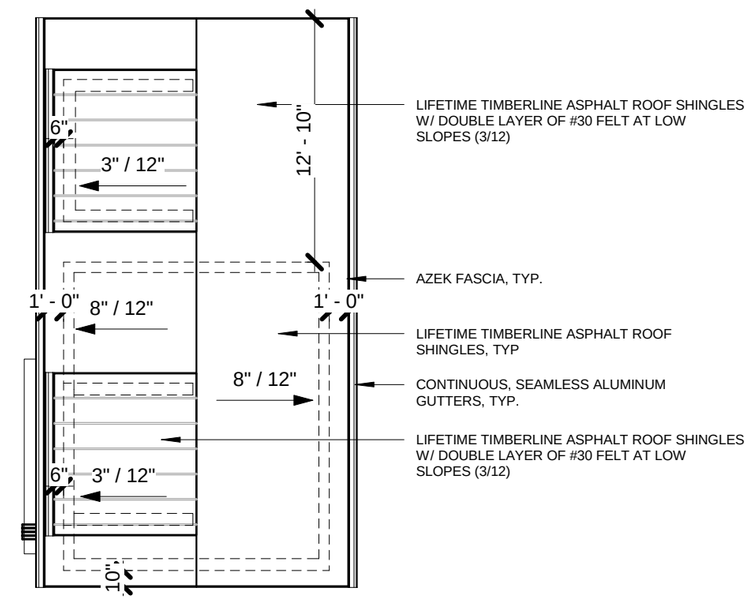

3 CABANA ROOF PLAN
1/8" = 1'-0"

PROGRESS PRINTS
NOT FOR CONSTRUCTION

ZO ARCHITECTS LLC
240 W. CRESCENT AVE., SUITE D
ALLENDALE, NJ 07401
T: 201.785.8855 F: 201.785.8866

MARY FITZPATRICK SCRO, ARCHITECT
LICENSE # 21AI01591800

ZONING BOARD APPLICATION

PROJECT #: 2119
PROJECT: ADLER RESIDENCE
22 BONNIE WAY
ALLENDALE, NJ

TITLE: CABANA PLANS
DATE: 04/01/22
SCALE: 1/8" = 1'-0"

DRAWING #: SK-9

1 CABANA FRONT ELEVATION
1/8" = 1'-0"

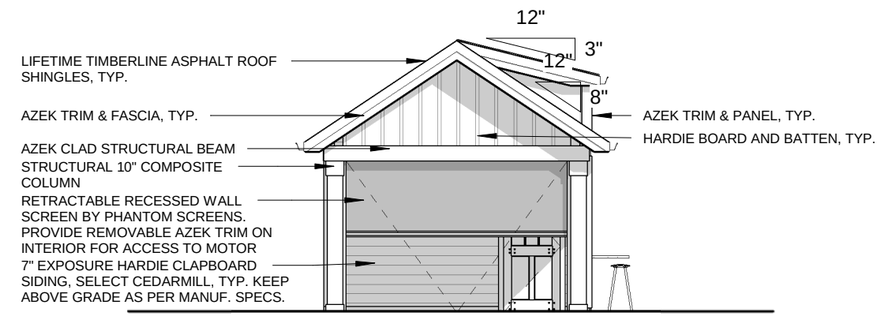

2 CABANA LEFT ELEVATION
1/8" = 1'-0"

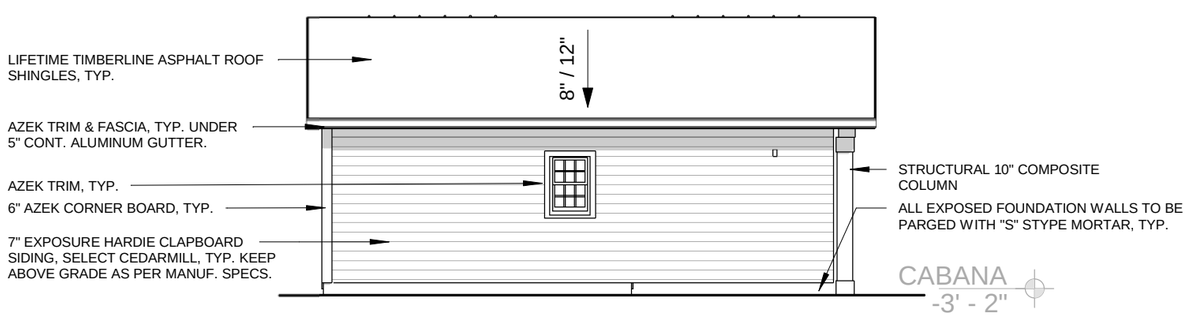

3 CABANA REAR ELEVATION
1/8" = 1'-0"

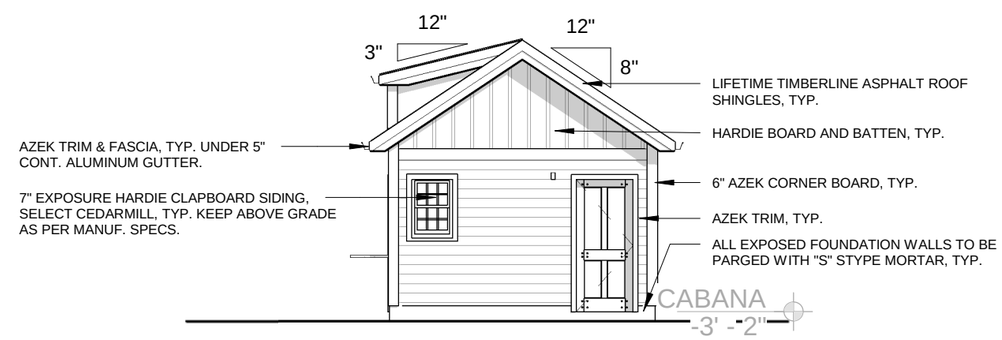

4 CABANA RIGHT ELEVATION
1/8" = 1'-0"

PROGRESS PRINTS
NOT FOR CONSTRUCTION

ZA ARCHITECTS LLC
240 W. CRESCENT AVE., SUITE D
ALLENDALE, NJ 07401
T: 201.785.8855 F: 201.785.8866

MARY FITZPATRICK SCRO, ARCHITECT
LICENSE # 21AI01591800

ZONING BOARD APPLICATION

PROJECT #: 2119
PROJECT: ADLER RESIDENCE
22 BONNIE WAY
ALLENDALE, NJ

TITLE: CABANA ELEVATIONS
DATE: 04/01/22
SCALE: 1/8" = 1'-0"

DRAWING #: SK-10

PROGRESS PRINTS
NOT FOR CONSTRUCTION

ZA ARCHITECTS

240 W. CRESCENT AVE., SUITE D
ALLENDALE, NJ 07401
T: 201.785.8855 F: 201.785.8866

MARY FITZPATRICK SCRO, ARCHITECT
LICENSE # 21AI01591800

ZONING BOARD APPLICATION

PROJECT #: 2119
PROJECT: ADLER RESIDENCE
22 BONNIE WAY
ALLENDALE, NJ

TITLE: EXISTING PHOTOS
DATE: 04/01/22
SCALE:

DRAWING #: SK-11

PROGRESS PRINTS
NOT FOR CONSTRUCTION

ZA ARCHITECTS LLC
240 W. CRESCENT AVE., SUITE D
ALLENDALE, NJ 07401
T: 201.785.8855 F: 201.785.8866

MARY FITZPATRICK SCRO, ARCHITECT
LICENSE # 21AI01591800

ZONING BOARD APPLICATION

PROJECT #: 2119
PROJECT: ADLER RESIDENCE
22 BONNIE WAY
ALLENDALE, NJ

TITLE: EXTERIOR VIEWS
DATE: 04/01/22
SCALE:

DRAWING #: SK-12

PROGRESS PRINTS
NOT FOR CONSTRUCTION

ZT ARCHITECTS LLC

240 W. CRESCENT AVE., SUITE D
ALLENDALE, NJ 07401
T: 201.785.8855 F: 201.785.8866

MARY FITZPATRICK SCRO, ARCHITECT
LICENSE # 21AI01591800

ZONING BOARD APPLICATION

PROJECT #: 2119
PROJECT: ADLER RESIDENCE
22 BONNIE WAY
ALLENDALE, NJ

TITLE: EXTERIOR VIEWS
DATE: 04/01/22
SCALE:

DRAWING #: SK-13

RESOLUTION
LAND USE BOARD
BOROUGH OF ALLENDALE
BERGEN COUNTY, NJ

DATE: April 18, 2022

RESOLUTION: 22-15

Land Use Board	Motion	Second	Yes	No	Abstain	Absent
Bergen						
Daloisio						
Davis						
Kistner						
Lovisolo						
Yaccarino						
Sirico						
Bernstein						
Quinn						
Forbes - Alt. #1						
Putrino – Alt. #2						

Carried☐ Defeated ☐ Tabled ☐

RESOLUTION 22-15

LAND USE BOARD OF THE BOROUGH OF ALLENDALE

RESOLUTION APPROVING
SITE PLAN AMENDMENT FOR
MINARIS REGENERATIVE MEDICINE
BLOCK 702, LOT 17
(a/k/a 75 COMMERCE DRIVE)

WHEREAS, the applicant, MINARIS REGENERATIVE MEDICINE, with a business address of 75 Commerce Drive, Allendale, NJ (Block 702, Lot 17) and has applied for a site plan amendment to install various entrance/exits on the building, construct new cold storage and waste holding enclosures, add HVAC equipment, install a proposed roll-up lock door for box trucks, as well as other associated interior and exterior site improvements to its premises; and

RESOLUTION
LAND USE BOARD
BOROUGH OF ALLENDALE
BERGEN COUNTY, NJ

DATE: April 18, 2022

RESOLUTION: 22-15

WHEREAS, the Land Use Board has reviewed the evidence and testimony of the Applicant and its professionals, including Engineering and Architectural plans and photographs, and the testimony of the Borough Engineer, at its public meeting on March 16, 2022; and

NOW THEREFORE BE IT RESOLVED by the Borough of Allendale Land Use Board that it hereby makes the following findings of fact and conclusions:

1. Notice of the public hearing was properly given by the applicant in accordance with applicable law.

2. The Property is located in the EM Zone District. This zone provides for mixed industrial uses, among other uses. The application was submitted in evidence. No variance relief was necessary nor requested for this application.

3. As part of the application, the applicant submitted Engineering Plans entitled "Minor Site Plan" for Minaris Regenerative Medicine, Block 702, Lot 17, 75 Commerce Drive, Borough of Allendale, County of Bergen, New Jersey, prepared by Lapatka Associates, Inc., dated December 30, 2021 and a "Location Survey" for Minaris Regenerative Medicine, Block 702, Lot 17, 75 Commerce Drive, Borough of Allendale, County of Bergen, New Jersey, prepared by Lapatka Associates, Inc., dated August 28, 2018. Applicant also submitted Architectural Plans entitled "75 CD Expansion", prepared by Michael T. Marone, AIA, dated January 17, 2022. These plans and exhibits were in evidence and reviewed and examined by the members of the Land Use Board.

4. The applicant's architect, Michael T. Marone, was sworn and testified that the applicant was seeking to amend the site plan to make various improvements to the site to compliment expanded operations at the site. He further testified that this is a two story building and that the plans called for expanding to a vacated section of the building. There would be new employee entrances in the front and the back, with new stairs to be constructed at both areas as well. The new entrance would be segregated for employees only, and no visitors would be allowed to enter in these locations. Segregated waste docks for "clean" and "dirty" waste would also be added to the rear of the premises. Additional trees and landscaping would also be added around the building.

6. The applicant's professional engineer, Andrew Missey, P.E., was sworn and accepted as an expert in the field of engineering. He testified that this is an 8.9 acre site with 3 tenants in the building. There are 305-310 parking spaces on site. The amended site plan does not change the parking figures, and that existing parking spaces were adequate for the premises and

its current operations. Square footage of the applicant's premises is increasing by approximately 400 square feet. The present impervious coverage is 57% and the proposal bring it to 57.1%. He testified as to the specifications of the updated survey and engineering plans, which included new sidewalks, entrances/exists and associated stairways. Further, he testified that new trees and replacement trees are to be planted. This landscaping consists of accent trees and foundation plantings. There is no impact of any importance to the surrounding area, and no impact on drainage or stormwater management. The applicant did agree to upgrade and retrofit all the existing stormwater inlets on site to bring into compliance with current regulations.

7. Constantino Rodriguez, Operations Manager for Minaris, was sworn and testified as to the operations of the applicant on site. Mr. Rodriguez stated they are an organization that provides development of cell therapy. There are 220-240 employees, and there are few visitors on a daily basis.

8. Borough Engineer, Michael Vreeland, P.E. reviewed the submissions by the applicant. Mr. Vreeland provided testimony relative to the application to the Land Use Board, and testified that the proposed site plan amendments were minor and would have no negative impact, and that all performance standards in connection with the unit had been met. He also testified that stormwater management controls would need to be complied with, and the applicant confirmed on the record that all stormwater management controls would be in compliance with State standards.

9. No members of the public appeared in connection with the application.

BE IT FURTHER RESOLVED, based upon the factual and legal evidence, and testimony and contentions set forth herein by the applicant's professionals and the Borough Engineer, said testimony and evidence which is specifically adopted by the Land Use Board, that the Allendale Land Use Board hereby grants the applicant's request for a site plan amendment to allow the improvements referenced in the application, to wit, installation of various entrance/exits on the building, construction of new cold storage and waste holding enclosures, additional HVAC equipment, installation of a proposed roll-up lock door for box truck, as well as other associated interior and exterior site improvements to its premises as proposed in the application; and

BE IT FURTHER RESOLVED that the Allendale Land Use Board hereby grants approval of the site plan amendment, subject to the following conditions:

A. All fees and assessments required by ordinances, and due and owing to the Borough of Allendale for this site for professional review and approval of the applicant's plans, shall be paid in full to the Borough of Allendale by the applicant.

B. The applicant agrees as part of the approved site plan amendments to be constructed that it will upgrade/retrofit the existing stormwater inlets on site to bring into compliance with current regulations.

C. Stormwater and drainage improvements on the amended Site Plan shall be addressed in the field in consultation with the Borough Engineer in order to minimize any impact on surrounding properties, including the adjacent Celery Farm Nature Preserve.

BE IT FURTHER RESOLVED that construction shall proceed in accordance with this Resolution, the approved plans and drawings marked in evidence, the testimony of the applicants and in accordance with all applicable State, County and Municipal codes, ordinances, rules and regulations.

BE IT FURTHER RESOLVED that the Land Use Board Secretary shall mail a copy of this Resolution within ten days from the date of adoption thereof to the applicant or to their attorney, if any, without charge; and to all other persons who request the same and pay the required fee therefore. The Secretary shall also file a copy of this Resolution in the offices of the Borough Clerk, Building Inspector, Construction Code Official, Tax Assessor and the Borough Attorney and shall publish a brief notice of the decision in the official newspaper, the cost of which shall be paid for by the applicant.

RESOLUTION
LAND USE BOARD
BOROUGH OF ALLENDALE
BERGEN COUNTY, NJ

DATE: April 18, 2022

RESOLUTION: 22-15

Approved:

ALLENDALE LAND USE BOARD

_____
KEVIN QUINN, Chairman

Attest:

_____
JOSEPH DALOISIO, SECRETARY

Adopted: April 18, 2022

ALLENDALE LAND USE BOARD
APPLICATION CHECK LIST

NAME Pergola, Vincent & Peterson, Anna BLOCK 511 LOT 7

ADDRESS 38 East Crescent Avenue, Allendale, New Jersey

ZONE AA TYPE OF VARIANCE

BRIEF DESCRIPTION OF APPLICATION

SPECIFIC VARIANCE(S) REQUIRED Side yard steback of 5.7 feet and 13.5 feet, where 20 feet is required; front yard setback of 25 feet, where 40 feet is required; height of 37.1 feet, where a maximum of 35 feet is permitted.

ADMINISTRATIVE REQUIREMENTS		STATUS
1.	Application form complete	X
2.	Fee paid	X
3.	Denial by Building Inspector	X
4.	Affidavit of Service	
5.	Proof of Publication	
6.	Taxes Current	X
7.	Plot Plan	X
8.	Maps	X
9.	Photographs	
10.	Email address	X
11.	Miscellaneous	

3/9/22
Date

Applicant's Signature
Bruce E. Whitaker, Esq. Attorney for Applicant

REQUIRED MATERIALS AND CHECKLIST FOR
ALLENDALE LAND USE BOARD HEARINGS

This checklist and attached sample drawings are provided to ensure that you or your professionals are prepared for your hearing and that your application is complete. All items should be supplied to the extent that they are applicable to the specific application. If information is insufficient or missing, the board may deem your application incomplete and adjourn your hearing until it receives all necessary documentation. Please create 15 packets of the below information.

I. PROVIDE AN ACCURATE SURVEY FOR THE PROPERTY IN QUESTION WHICH CONTAINS THE FOLLOWING INFORMATION:

_x_ 1. Footprint of existing buildings or structures.

_x_ 2. Precise distances from all property lines to closest point of principal building including steps, deck or other extensions of the building.

_x_ 3. The location and precise distances of accessory buildings, such as garages and sheds, to property lines and the principal building or structure.

_x_ 4. The location and dimensions of steps, patios, driveways, decks, pools and all other improved impervious areas and their precise distances to nearest property line and structures.

_x_ 5. An accurate depiction of the proposed construction or alteration including the information requested in 1, 2, 3 and 4 above.

_x_ 6. The precise distances from all property lines to the closest point of the proposed construction.

II. AN ENLARGED TAX MAP DEPICTING PROPERTY IN QUESTION AND ITS RELATIONSHIP TO NEIGHBORING PROPERTIES.

_x_ 1. The precise distances from the existing buildings or structure in question to the closest point of all neighboring buildings and structures.

_x_ 2. The precise distances from the proposed construction to the closest point of all neighboring buildings and structures.

III. STRUCTURAL DIMENSIONS:

_x_ 1. All dimensions of existing building or structure.

_x_ 2. All dimensions of proposed building or structure.

_x_ 3. Height of existing building or structure.*

_x_ 4. Height of proposed building or structure.*
*(height to be measured from lowest point of the ground that abuts the foundation of the structure to the highest point on the roof.)

_x_ 5. Front, rear and side elevations of the proposed structure.

IV. FLOOR PLANS.

_x_ 1. Floor plans of the existing interior of the building containing all relevant dimensions.

_x_ 2. Floor plans of the interior of the proposed construction containing all relevant dimensions.

_x_ 3. Precise square footage of the existing building.

_x_ 4. Precise square footage of the proposed construction.

_x_ 5. Floor area ratio calculation pursuant to Section 270-63 of the zoning ordinance (required for all applications)

V. PHOTOGRAPHS.

_x_ 1. Photographs of the property in question and existing improvements may be helpful to the Board in presenting your information.

_x_ 2. Photographs of views from the existing building or structure to neighboring properties and buildings which show existing plantings or other buffers are also helpful and may be requested by the Board.

(All photographs should be taken by you or someone who can testify to the Board as to when they were taken and that the photographs represent an accurate depiction of what they saw at the time.)

VI. LANDSCAPING AND LAND FEATURES.

____ 1. The survey, plat or plan should locate and describe any proposed landscaping to be done in connection with the application.

____ 2. The location of any unusual property features should be indicated, such as flood plain, streams, wooded areas, rock outcroppings or steep slopes.

VII. PREVIOUS APPLICATIONS. – **None**

____ 1. Applicants should be prepared to discuss prior applications to the Land Use Board, Board of Adjustment and Planning Board and the results thereof.

VIII. Any additional information which may be deemed necessary by the Land Use Board, its Consultants or Borough departments and agencies.

NOTE: ALL DIMENSIONS AND DISTANCES MUST BE DEPICTED TO SCALE ON DRAWINGS AND PLANS.

Any questions regarding your hearing or the checklist should be directed to the Land Use Administrator at the Borough of Allendale Municipal Building 201-818-4400 x202. Please submit fifteen (15) packets with copies of all drawings and plans to the Land Use Administrator at least ten (10) days prior to the hearing. It is suggested that the property owner refer to the appropriate building code to assure proper engineering and construction techniques, or to secure the services of a local, reputable architect and/or engineer.

2/23/22
Date

Signature
Vincent Pergola

2/23/22
Date

Anna Peterson

ADDENDUM

Vincent Pergola and Anna Peterson (hereinafter referred to as the "Applicant") are the Owners of 38 East Crescent Avenue, Allendale, New Jersey, shown on the Tax Map of the Borough of Allendale as Block 511, Lot 7 (hereinafter referred to as the "Property"). The Property is located in the AA Residential Zone.

The Property is a nonconforming lot having a lot area of 10,817 square feet, where 26,000 square feet is required. There is a single family two-story dwelling unit on the Property that was built prior to the creation of the current Allendale Zoning Ordinances. Besides being deficient in lot area, the Property has the following nonconformities:

A. Lot width of 58.16 feet, where 100 feet is required;

B. Front yard setback of 31.5 feet, where 41.4 feet is required;

C. Side yard setback of 5.7 feet, where 20 feet is required.

The Applicant is proposing to construct a two-story addition to the rear of the existing dwelling unit, and to construct a porte-cochere on the southerly side of the dwelling unit. The porte-cochere is an open structure of 180 square feet, and it is stipulated that it would always remain open. The purpose is to permit a car to be parked there out of the weather for easy access into the dwelling unit recognizing that the detached garage is a considerable distance to the rear of the Property.

There is currently a side yard setback of 5.7. The Applicant proposes the rear two-story addition to continue as an extension of the northerly line of the existing dwelling unit. The dwelling unit itself is skewed on the Property. The 5.7 foot side yard setback is existing. By virtue of the Applicant's proposal, the left side, side yard setback is following the same nonconformity, but the side yard setback widens to 7.4 feet at the end of the addition.

The porte-cochere would have a side yard setback of 13.5 feet, and a front yard setback of 25 feet.

The Applicant seeks the following variances:

A. Side yard setback existing of 5.7 feet which runs to 7.4 feet, where 20 feet is required for the addition;

B. Side yard setback of 13.5 feet to the porte-cochere, where 20 feet is required;

C. Front yard setback of 25 feet to the porte-cochere, where 40 feet is required, or based upon average setback of neighboring properties, 30 feet is required;

D. Roof height for the addition of 37.1 feet, where 35 feet is the maximum permitted.

The Zoning Officer of the Borough of Allendale reviewed the plans and confirmed that variance relief is required as previously set forth in this Addendum. His review letter is attached.

It is submitted that variance relief can be granted in this instance under N.J.S.A. 40: 55D-70(C)(1), and (C)(2) for the following reasons:

A. **Side yard setback for the proposed addition** - The Property is substandard by way of area, and by way of width. To respect both side yard setbacks in this instance would require a building to be constructed 20 feet off of each side lot line. The 20 foot requirement is based upon and contemplates a lot width of 100 feet which is required under the Allendale Zoning Ordinance. This lot has only 58.16 feet, so to comply with the Ordinance a building width could only be 18.16 feet wide.

Compliance with the Zoning Ordinance in this instance would constitute a hardship. There is no detriment to the Zone Plan or Zoning Ordinances of the Borough of Allendale relative to this proposal. The addition is to the rear of the existing dwelling unit. The setback follows the building line that already exists. The current side yard setback is 5.7

feet. The Applicant's proposed addition based upon the dwelling unit being skewed creates a wider side yard setback and expands it to 7.4 feet. Therefore, there is no exacerbation of the pre-existing nonconforming side yard setback.

B. **Porte-cochere** - As shown on the Architectural Plans, the porte-cochere which is listed as a carport on the Site Plan, is an open area for a car to park to allow people easy access to a car out of weather conditions for entry and exiting the dwelling unit. It is a classic style that fits, architecturally and aesthetically with the style of this old dwelling unit. Most importantly, it is an open structure and the only thing that is infringing into the side yard setback is the roof and the columns holding the roof. It is an open air structure which will always remain open, and that is a stipulation of this proposal for variance relief. The dwelling unit itself has a side yard setback that is conforming of 23.7 feet. This open structure is approximately 10 feet in width, creating a side yard setback to the columns of 13.5 feet. Again, based upon the deficiency in lot width, compliance with the Zoning Ordinance in this instance for the side yard setback, creates a hardship for the Applicant.

There is no substantial detriment to the Zone Plan or Zoning Ordinances in this instance. The structure is an open structure. It fits well within the architectural framework of the dwelling unit itself, and is very characteristic for a structure of this vintage. It is next to an open porch and covered landing area, and can easily be accommodated on a lot with this width.

The proposed porte-cochere requires a front yard setback. Recognizing that the porte-cochere is open, it compliments the covered porch which also has a deficient front yard setback. The front yard setback is comprised of the roof and the columns. The current front yard setback

is 31.5 feet to the structure itself. The front yard setback to the covered porch and the porte-cochere would basically line up and be 25.3 feet.

C. **Height Variance** - The Property has an unusual condition in that it slopes down in the rear beyond the existing dwelling unit. The Applicant is proposing to construct a two-story addition that will follow the roof lines of the existing dwelling. To reduce the roof lines would create an addition that would look like an addition and would not be synthesized with the architectural elements and the roof lines that exist.

It is recognized that height is measured under the Allendale Ordinance from the lowest point around the dwelling unit to the tallest point of the dwelling unit. The unusual topographic conditions in this instance creates the necessity for variance relief. The roof elevation is 149.1 feet, and the elevation to the rear is 112 feet, which equals 37.1 feet. Compliance in this instance with the Zoning Ordinance based upon this unusual condition, would constitute a hardship to the Applicant.

There is no substantial detriment to the Zone Plan or Zoning Ordinances of Allendale relative to this proposal. The addition is to the rear, and is not readily discernible from East Crescent Avenue. Most importantly, the roof lines up between the existing structure and addition so that from an architectural and aesthetic standpoint, the addition fits properly with the existing dwelling unit and respects the architectural elements of this classic style vintage building.

Variance relief is also appropriate for all the variances being sought under N.J.S.A. 40:55D-70(C)(2). It is recognized that aesthetic considerations can be considered for variance relief and in this instance, the total upgrade of this classic building, preserving the style of this building and creating architectural elements for the vintage of this building as it pertains to the

porte-cochere together with creating an addition to upgrade the living space of the dwelling unit, are all appropriate in this instance. The Applicant's proposal as it pertains to upgrading the dwelling unit, creating the porte-cochere, creates a better streetscape. Interestingly, even though the lot has an area of less than 40% of what is required, the Applicant's proposal meets the requirements for gross building area and for floor area ratio. In addition, impervious coverage on a lot with this deficiency in area, is only 35.1%, where 51.88% is permitted.

It is the Applicant's position that variance relief can be granted based upon the reasons set forth in this Addendum.

BOROUGH OF ALLENDALE
CODE ENFORCEMENT OFFICE
500 West Crescent Avenue Allendale, NJ 07401

Anthony Hackett
Zoning Official

Phone: (201) 818-4400 x208
Fax: (201) 825-1913

MEMORANDUM

TO: Vincent Pergola & Anna Peterson
38 E Crescent Ave
Allendale, NJ 07401

FROM: Anthony Hackett, Zoning Official/Construction Official

CC: Linda Garofalo Land use Administrator

RE: Two story addition, and adding a car port, and expanding the driveway

DATE: January 19, 2022

The Allendale Building/Zoning Department received the following documents:

A. Borough of Allendale Zoning Review Application

B. Drawings prepared by Harry Goldstein Architect, Monsey, NY

C. Site Plan prepared by Lantelme, Kurens & Associates P.C. Surveyors

I have reviewed these documents and the Borough of Allendale Zoning Ordinances and I must deny your application for the following reason(s):

1) 38 E Crescent Ave. is located in the AA Zone, and is considered a non-conforming existing structure. The minimum side yard setbacks for your home are 20'. Currently you have 23.7' on the right side and 5.7' on the left, (Existing Non-conforming). Your proposed addition on the left side is following that same non-conformity. **See Borough Ordinance 270-37.**

2) Your proposed car port on the right side creates a side yard setback of 13.5' where 20' is required, see **Borough Ordinance 270-54C**

3) The proposed car port creates a front yard setback of 25' where 40' is required, or possibly 30' depending on the neighbors, **See Borough Ordinance 270-54B**

4) The maximum height of a structure is 35' measured from the lowest point around the house to the tallest point of the house. The property slopes down in the rear and according to the site plan, the roof peak elevation is 149.1 and the elevation at the rear is 112 which equals 37.1', not including the basement stairwell which is obviously lower, **See Borough Ordinance 270-54A**

You are hereby notified that you have the right under N.J.S.A. 40:55D-72 to appeal this decision to the Zoning board of adjustments of the Borough of Allendale within 20 days from the date of the decision. For further information please visit. http://allendalenj.gov/zoning-board-of-adjustments/

Anthony Hackett
Construction Official

BOROUGH OF ALLENDALE
500 West Crescent Avenue
Allendale, New Jersey 07401

DATE: February 24, 2022

VERIFICATION OF TAXES PAID

Pursuant to Municipal Land Use Law:

This is to certify that taxes for the year _2022_____ are paid through

the _____1st ____Quarter

BLOCK: 511 LOT: 7

OWNER OF RECORD: Vincent Pergola and Anna Peterson

PROPERTY LOCATION: 38 East Crescent Avenue, Allendale, New Jersey
Block 511, Lot 7

Gina Wittmaack
Tax Collector

SUBURBAN

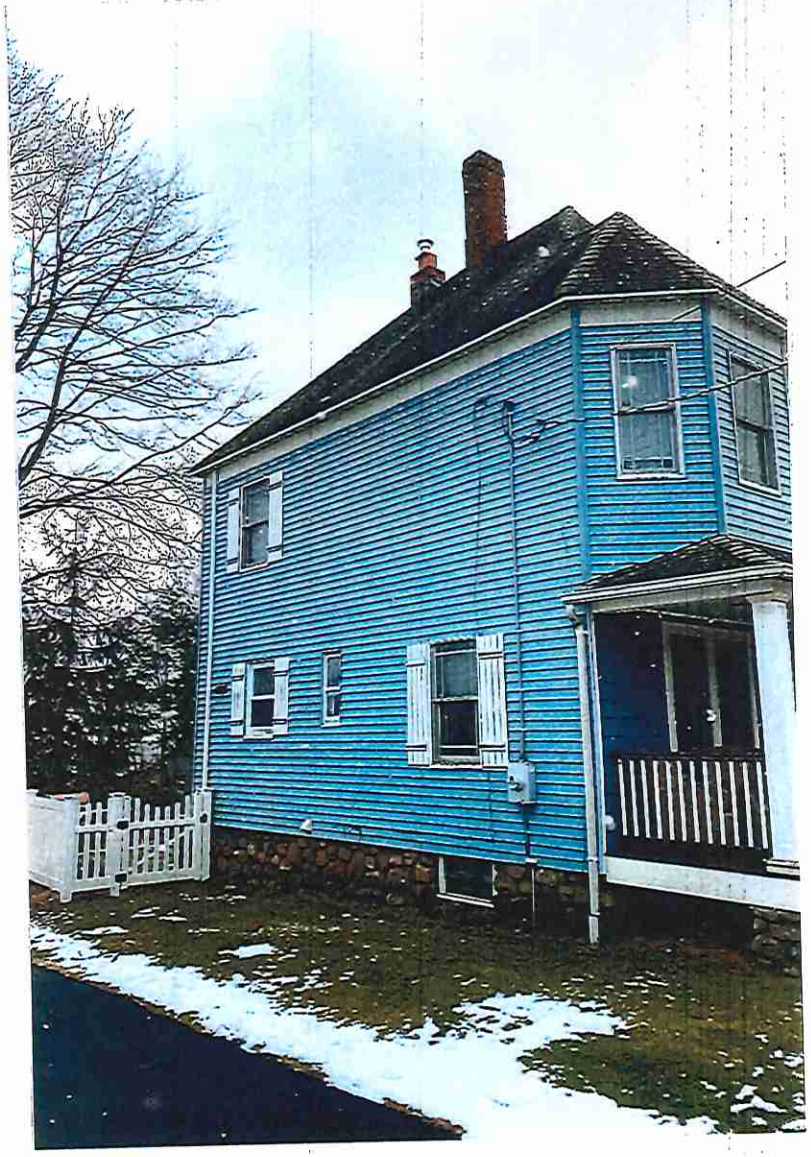

AA RESIDENTIAL ZONE				
	Required	Existing	Proposed	Variance Required
Lot Area	26,000 sf	10,817 sf	10,817 sf	No*
Lot Width	100 ft	58.16 ft	58.16 ft	No*
Setbacks				
Front Yard	41.4 ft	31.5 ft	31.5 ft	No*
Side Yard	20 ft	5.7 ft	5.7 ft	Yes*
Side Yard	20 ft	23.7 ft	23.1 ft	No
Rear Yard	50 ft	114.8 ft	93.4 ft	No
CarPort				
Front Yard	41.4 ft	NA	25.3 ft	Yes
Side Yard	20 ft	NA	13.5 ft	Yes
Bldg. Height	2 ½ sty/35 ft	35.2 ft	36.7 ft	Yes*
Gross Bldg Area**	24.84%	–	2623 sf/24.25%	No
FAR**	24.84%		2623 sf/24.25%	No
Impervious Cov.	52.88%	2816 sf/26.01%	3796 sf/35.1%	No

* Existing Non-conformity
** Per Architect.

Dwelling Living Area** – 2345 SF
Garage Area – 278 SF
Total Gross Building Area – 2623 SF

LOT COVERAGE CALCULATIONS

EXISTING	
DWELLING	706 sf
GARAGE	278
COVERED PORCH	151
TOTAL BUILDING	1135 sf = 10.6%
FRONT WALK/STEPS	81
MECH. PAD	4
REAR WALKS/STEPS	188
CELLAR ENTRANCE	24
PAVER PATIO	320
DRIVEWAY	1064
TOTAL	2816 sf = 26.0%

PROPOSED	
DWELLING	1267 sf
CARPORT	180
COVERED LANDING	57
GARAGE	278
COVERED PORCH	151
TOTAL BUILDING	1933 sf = 17.9%
FRONT WALK/STEPS	81
MECH. PAD	16
CELLAR ENTRANCE	64
REAR LANDING/STEPS	77
PAVER PATIO	320
DRIVEWAY	1305
TOTAL	3796 sf = 35.1%

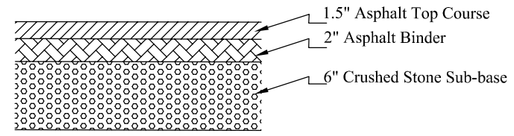

DRIVEWAY PAVEMENT DETAIL

N.T.S.

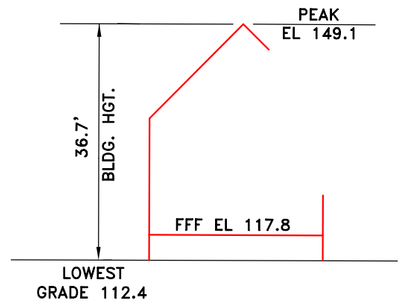

BUILDING HEIGHT CALCULATION

N.T.S.

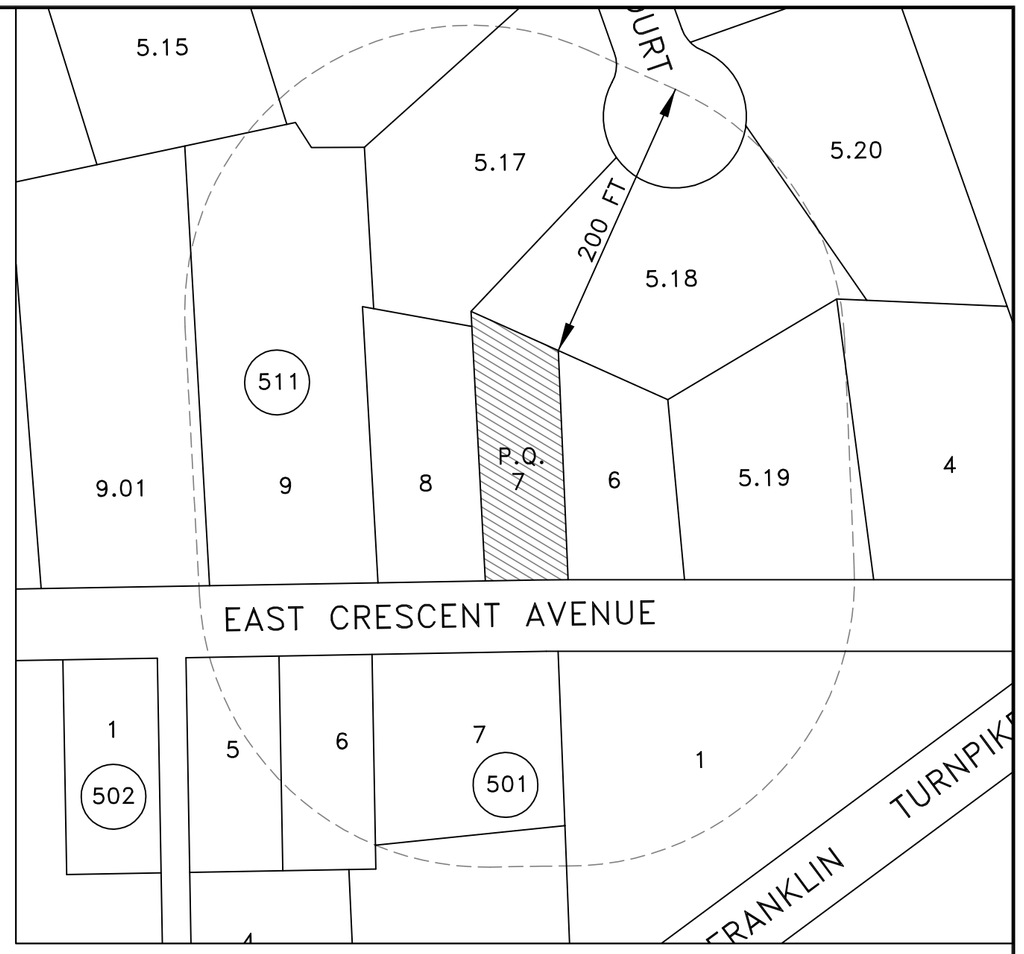

KEY MAP SCALE: 1"=150'

NOTES:

1. Applicant: Vincent Pergola
2. Property address: 38 East Crescent Avenue, Allendale, NJ.
3. Property known as Block 511 Lot 7 in accordance with the Tax Assessment Map of the Borough of Allendale.
4. Property is located in the AA Residential zone.
5. Elevations based on an assumed datum.
6. Existing spot elevations indicated with an X. Proposed spot elevations in [ ].
7. Underground utility locations to be verified and marked-out in the field prior to commencement of construction activities.
8. Location of existing utility connections from previous structure are to be inspected. If same are not in acceptable condition, new service connections shall be installed in accordance with Borough specifications.
9. Roof leaders shall be connected to proposed seepage pits as shown.
10. The applicant shall be responsible for the replacement of any curbing or pavement damaged or destroyed as a result of construction activities or in disrepair as determined by the Borough Engineer. The applicant shall be responsible to immediately remove any soil tracked or washed onto the street.
11. Applicant to contact the engineering department 48 hours prior to construction of the seepage pits to schedule an inspection.
12. Property survey performed on November 22, 2021 by Lantelme, Kurens & Associates, P.C.

FRONT OFFSETS			
BLOCK	LOT	ADDRESS	OFFSET
511	11	90 EAST CRESCENT	51.9
511	10	84 EAST CRESCENT	47.9
511	9.01	70 EAST CRESCENT	64.2
511	9	58 EAST CRESCENT	39.9
511	8	46 EAST CRESCENT	15.7
511	6	30 EAST CRESCENT	31.7
511	5.19	26 EAST CRESCENT	44.6
511	4	2 EAST CRESCENT	35.4
		AVERAGE	41.4

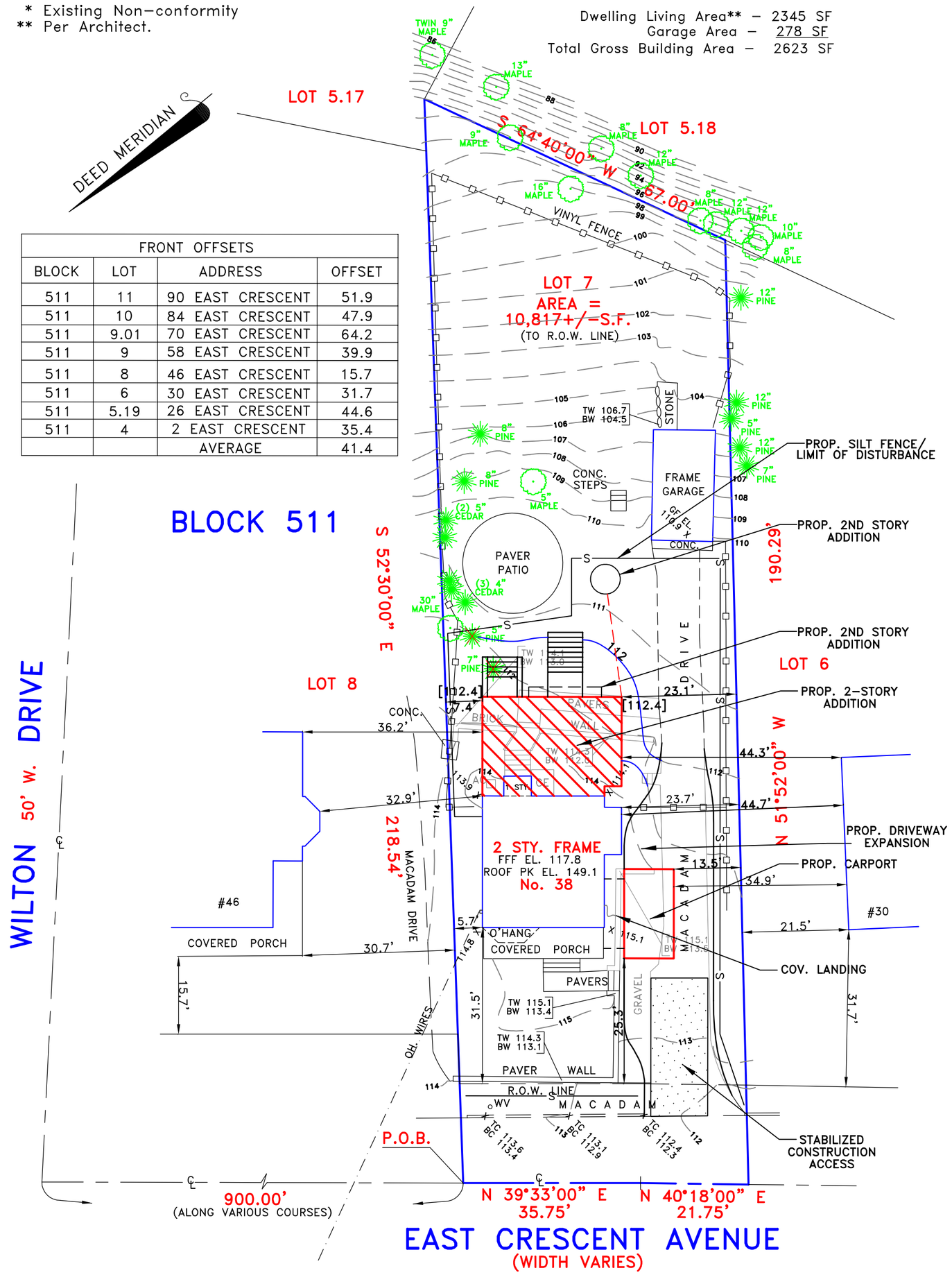

Soil Moving Requirements	
Basement	
Area = 552 sf Area w/1.5' overdig = 664 sf Avg. Cut = 5.0 ft Cut = (664 sf)(5.0 ft)= 123	
Total Cut = 123 Backfill = (664-552)(5.0)	123 yds cut 21 yds fill
Seepage Pit	33 yds cut
	6 yds fill
Total Cut	156 yds cut
Total Fill	27 yds fill
Net Soil Removed from Site	127 yds

DRAINAGE CALCULATIONS (3 Inch Rainfall Event)	
New Roof Area =	741 sf
=	106,704 si
Storage Required = 106,704 si x 3 in =	320,112 ci
=	1,386 gal
Storage Provided 1 x 1,923 gal =	1,923 gal

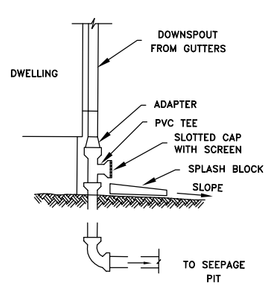

DOWNSPOUT DETAIL

N.T.S.

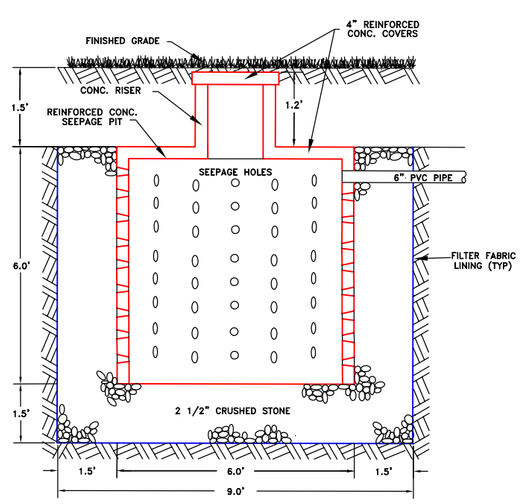

1000 GALLON SEEPAGE PIT DETAIL

N.T.S.

REVISED 3-7-22 OFFSETS TO ADJOINING DWELLINGS
REVISED 2-3-22 FRONT OFFSETS; ZONING TABLE

Lantelme, Kurens & Associates, P.C. Engineers & Land Surveyors
101 West Street, P.O. Box 486, Hillsdale, New Jersey 07642 (201) 666-2450

SCALE: 1"=20'	**SITE PLAN FOR VINCENT PERGOLA** **Lot 7 Block 511 38 East Crescent Avenue** **Borough of Allendale, Bergen County, N.J.**	CERTIFIED TO:
DATE: DECEMBER 1, 2021		
PARTY: GB/EW		
PREPARED BY: CJL		
DRAWN BY: SPM	PROPERTY SITUATED IN THE BOROUGH OF ALLENDALE, BERGEN COUNTY, NEW JERSEY.	
LOT NO. 7		
BLOCK NO. 511	MAP SOURCE: TAX ASSESSMENT MAP OF THE BOROUGH OF ALLENDALE, BERGEN COUNTY, NEW JERSEY.	Christopher Lantelme P.E. & L.S. 39580
FILE NO. SP38ECRESCENT		

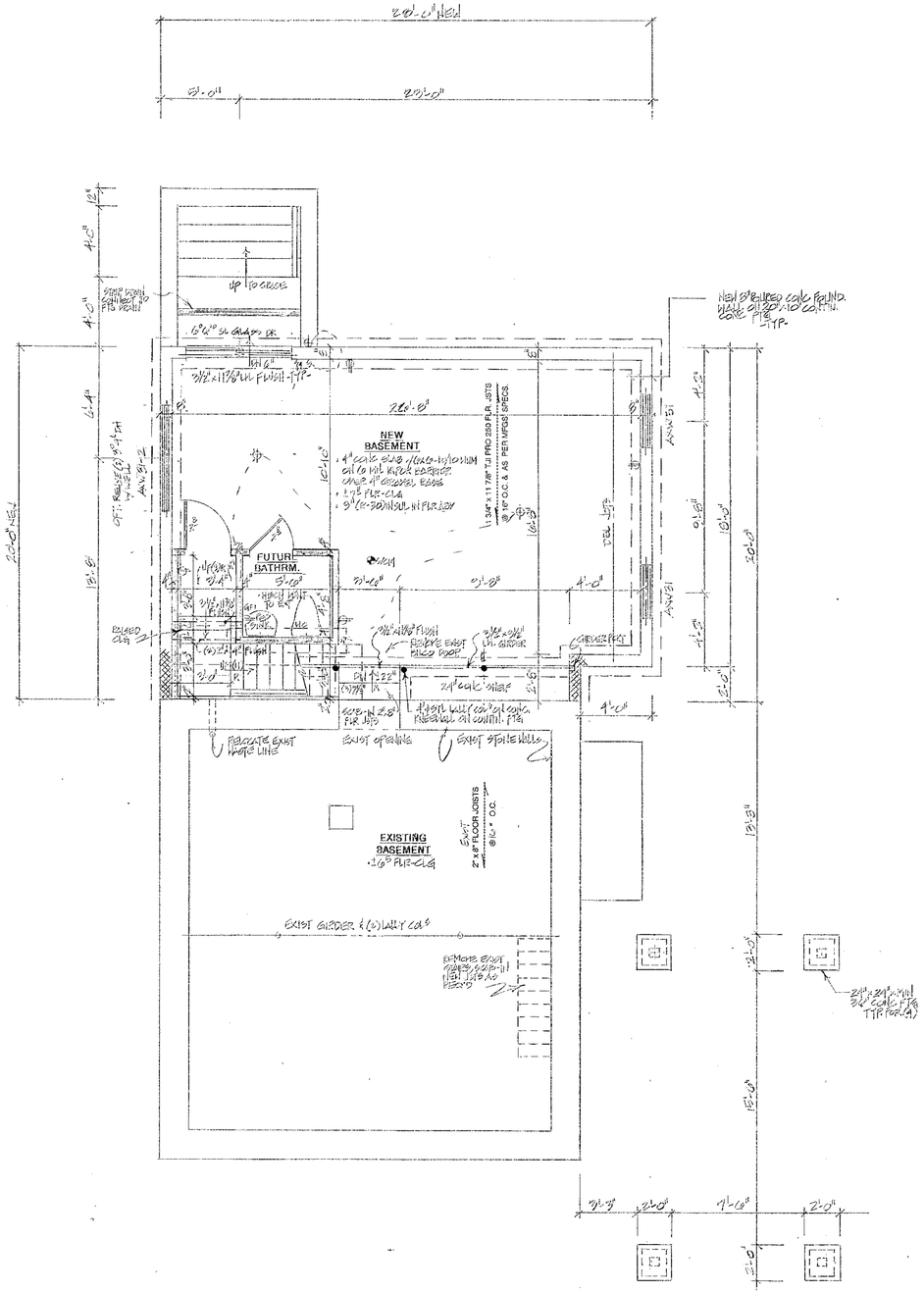

BASEMENT/FOUNDATION PLAN

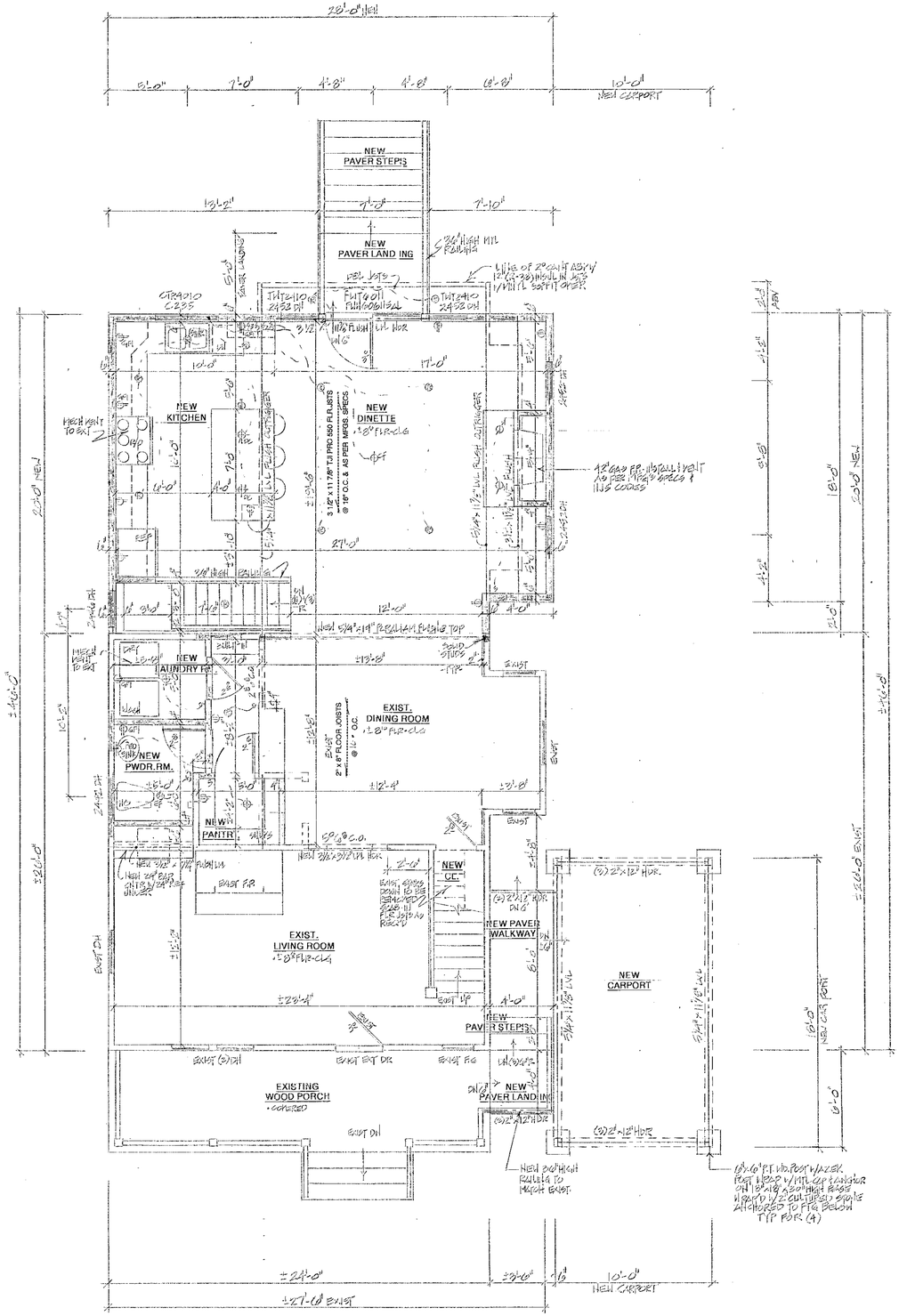

MAIN FLOOR PLAN

EXIST. S.F.: 655; NEW S.F.: 552
TOTAL MAIN FLR. S.F.: 1207

SCALE: 1/4"=1'-0"

NEW CARPORT S.F.: 236
EXIST. COVERED PORCH S.F.: 144

GENERAL SPECIFICATIONS

GENERAL NOTES

1. ALL WORK PERFORMED SHALL COMPLY WITH THE BUILDING AND ZONING ORDINANCES OF THE TOWN OF ALLENDALE AND THE N.J.S. BUILDING AND ENERGY CODES.

2. THESE PLANS ARE TO BE USED FOR PERMITS & CONSTRUCTION GUIDE ONLY. IT IS NOT INTENDED TO BE USED AS A CONTRACT DOCUMENT, UNLESS OTHERWISE INDICATED BY ARCHITECT.

3. CONTRACTOR OR ANY SUBCONTRACTOR DOING ANY WORK UNDER THIS CONTRACT SHALL CARRY LIABILITY AND PROPERTY DAMAGE INSURANCE AGAINST ACCIDENTS OF ALL KINDS AND SHALL FURNISH OWNER WITH CERTIFICATE OF INSURANCE.

4. CONTRACTOR SHALL BE RESPONSIBLE FOR CHECKING ALL DIMENSIONS ON THESE PLANS AGAINST FIELD CONDITIONS PRIOR TO CONSTRUCTION AND REPORT ANY DISCREPANCIES TO THE ARCHITECT.

5. ALL DIMENSIONS AND LOCATIONS AS INDICATED ON THE DRAWINGS SHALL BE CONSIDERED AS REASONABLY CORRECT, BUT IT SHALL BE UNDERSTOOD THAT THEY ARE SUBJECT TO MODIFICATION AS MAY BE NECESSARY OR DESIRABLE AT THE TIME OF INSTALLATION TO MEET ANY UNFORESEEN OR OTHER CONDITION.

6. ARCHITECT AND REUTS9 CONSULTANTS HAVE NOT BEEN RETAINED FOR CONSTRUCTION INSPECTION SERVICES OR FOR APPROVAL OF SHOP DRAWINGS. ARCHITECT IS ONLY RESPONSIBLE FOR THESE WORKING DRAWINGS AND THEIR RELATED SPECIFICATIONS. IT REMAINS INCUMBENT ON THE CONTRACTOR TO INFORM THE BUILDING DEPARTMENT OR THE ARCHITECT OF ANY DISCREPANCY OR CHANGE ON APPROVED PLANS AND OF ANY UNFORESEEN DEVELOPMENT THAT MAY OCCUR DURING THE COURSE OF CONSTRUCTION.

7. ARCHITECT ASSUMES NO RESPONSIBILITY FOR ANY EXISTING STRUCTURE OR ANY UNFORESEEN PROBLEMS ARISING TO NEW CONSTRUCTION. ARCHITECT ASSUMES NO RESPONSIBILITY FOR ANY NEW CONSTRUCTION AND/OR DEMOLITIONS OPERATIONS AND METHODS.

8. CONTRACTOR SHALL FAMILIARIZE HIMSELF WITH EXISTING CONDITIONS. ALL DIMENSIONS AND CONDITIONS SHALL BE FIELD VERIFIED. ARCHITECT SHALL BE INFORMED OF ANY DISCREPANCIES, MATCH ALL EXISTING MATERIALS, DIMENSIONS, AND CONDITIONS AS THEY APPLY.

9. ALL DIMENSIONS ARE APPROXIMATE AND ARE TO BE FIELD VERIFIED PRIOR TO START OF WORK. DO NOT SCALE DIMENSIONS FROM DRAWINGS. WRITTEN DIMENSIONS ARE TO BE FOLLOWED FOR CONSTRUCTION PURPOSES.

10. ALL CONSTRUCTION & MATERIALS SHALL BE NEW - UNLESS OTHERWISE NOTED. ALL MATERIALS SHALL BE FURNISHED AND INSTALLED BY CONTRACTOR, UNLESS OTHERWISE NOTED.

11. ALL WORK OF THE VARIOUS TRADES INVOLVED WITH THE CONSTRUCTION OF THIS PROJECT, IS TO BE PERFORMED BY CAPABLE AND REPUTABLE CONTRACTORS, LICENSED IN THE STATE OF NEW YORK AND AS REQUIRED BY THE LOCAL GOVERNING AGENCY.

12. NO WORK SHALL BE STARTED UNTIL A BUILDING PERMIT HAS BEEN SECURED AS REQUIRED BY THE APPLICABLE GOVERNING AGENCY OR AGENCIES.

13. ALL CONDITIONS AND DIMENSIONS SHALL BE VERIFIED BEFORE START OF ANY WORK AND DISCREPANCIES OR VARIATIONS TO APPROVED PLAN ARE TO BE BROUGHT TO THE ATTENTION OF THE OWNER BEFORE PROCEEDING.

14. PRIOR TO COMPLETION OF THE WORK, CONTRACTOR SHALL REMOVE FROM THE JOB SITE ALL TOOLS, SURPLUS MATERIALS, EQUIPMENT, SCRAP, DEBRIS, AND WASTE EXCEPT AS OTHERWISE NOTED BY THE OWNER.

SITE NOTES

15. CONTRACTOR/OWNER IS RESPONSIBLE FOR NOTIFYING ALL UTILITY COMPANIES AND VERIFYING LOCATION OF SAME UTILITY COMPANIES LINES, SERVICES AND OTHER POSSIBLE EQUIPMENT OF UTILITY COMPANY.

16. ALL EXISTING CONDITIONS INDICATED ON THE PLANS TO BE REMOVED OR RELOCATED ARE TO BE SO EXECUTED IN A MANNER THAT WILL NOT DISTURB ADJOINING AREAS OR CONDITIONS WHICH ARE TO REMAIN.

17. EXTREME CAUTION IS TO BE TAKEN DURING EXCAVATION AND/OR DEMOLITION. CONTRACTOR TO OBSERVE ANY VARIATIONS OR UNFORESEEN DISCREPANCIES IN THE PLANS AND REPORTED IMMEDIATELY TO THE OWNER.

18. ALL FOOTINGS TO REST ON VIRGIN SOIL HAVING A MINIMUM BEARING CAPACITY OF 3,000 P.S.F. AT 3'-0" MINIMUM BELOW THE FINISHED GRADE.

19. EARTH UNDER CONCRETE SLAB BE THOROUGHLY COMPACTED AND CLEANED OF DEBRIS, WATER AND OTHER MATTER. THE SUB-GRADE SHALL BROUGHT TO A TRUE PLANE & COMPACTED TO SOLID BEARING. ALL FILL MATERIAL SHALL BE SOIL OR SOIL-ROCK MIXTURE FREE FROM ORGANIC MATTER AND OTHER OBJECTIONABLE MATERIAL. IT SHALL CONTAIN NO ROCKS OR LUMPS OVER SIX INCHES IN GREATEST DIMENSION AND NOT MORE THAN 15% OF THE ROCKS OR LUMPS SHALL BE LARGER THAN 3" IN GREATEST DIMENSION.

20. DO NOT BACKFILL UNTIL MAIN FLOOR SYSTEMS, INCLUDING SLABS AND FLOOR DECKING, ARE INSTALLED.

21. BACKFILL AGAINST 8" POURED CONCRETE WALLS SHALL BE A MAXIMUM OF 7'-0" AND 10" CONCRETE BLOCK WALLS MAXIMUM 6'-0" ABOVE SLAB TO ADJACENT GRADE.

22. TOP 6" OF NEWLY GRADED AREAS IS TO BE TOP SOIL RAKED FREE FROM DEBRIS, STICKS, STONES OVER 2" IN SIZE AND OBJECTIONABLE MATERIAL.

23. GENERAL CONTRACTOR OR OWNER SHALL FIELD VERIFY ALL INVERT ELEVATIONS AND SEWER CONDITIONS INDICATED PRIOR TO CONSTRUCTION. ARCHITECT ASSUMES NO RESPONSIBILITY FOR INFORMATION CONTAINED IN SURVEYS ON SEWER DEPT. RECORDS.

24. FOOTING DRAINS TO BE PROVIDED WHERE REQUIRED AND APPROPRIATE THEY SHALL BE LAID IN GRAVEL BED AND PROTECTED AT TOP WITH FILTER FABRIC AND PROVIDE POSITIVE OUTFLOW TO STORM DRAIN OR DRY WELL.

25. FINISHED GRADE AND DRIVEWAY SHALL PITCH AWAY FROM THE BUILDING, SO THAT ALL SURFACE WATER FLOWS AWAY FROM IT.

26. INSTALLATION OF GAS METERS SHALL BE IN STRICT ACCORDANCE WITH LOCAL UTILITY COMPANY SPECIFICATIONS.

27. INSTALLATION OF ELECTRIC METERS SHALL BE PERFORMED IN STRICT ACCORDANCE WITH LOCAL UTILITY COMPANY SPECIFICATIONS.

28. FINISHED GRADE HEIGHT SHALL BE MINIMUM 6" BELOW ADJACENT FRAMING MATERIAL (IF ANY) AS PER LOCAL CODES.

CONCRETE AND MASONRY

29. NEW POURED CONCRETE TO BE MINIMUM 3000 P.S.I. COMPRESSIVE STRENGTH AT 28 DAYS. 6.0 SACKS OF CEMENT MIN. PER CUBIC YARD OF CONCRETE AND MAXIMUM 7 GALLONS OF WATER PER 94LB SACK OF CEMENT. 5.14 GALLONS OF WATER PER 94 POUND SACK OF CEMENT FOR AIR ENTRAINED CONCRETE. SUBMIT TESTING REPORTS PERFORMED BY APPROVED TESTING LABORATORY, AS REQUIRED BY LOCAL OFFICIALS.

30. CONCRETE DESIGN, MATERIALS, AND METHODS OF CONSTRUCTION SHALL COMPLY WITH THE APPLICABLE STANDARD 3.9 RATIO OF THE AMERICAN CONCRETE INSTITUTE. ALL MASONRY OR CONCRETE ANCHORS AND FASTNERS OF ANY KIND, TO BE GALVANIZED OR ZINC COATED.

31. BLOCK FOUNDATION WALLS TO BE REINFORCED HORIZONTALLY WITH DUR-O-WAL EVERY SECOND COURSE AND VERTICALLY WITH (4) # 5 RE-BARS EVERY FOUR FEET (BLOCK SHALL BE FILLED SOLID WITH CONCRETE AROUND REINFORCING BARS.). TOP COURSE OF BLOCK SHALL BE FILLED SOLID WITH CONCRETE AND 5/8" DIAMETER ANCHOR BOLTS SHALL BE PLACED 4'-0" TO 6'-0" O.C.

REVISED 12/23/2021

PERGOLA RESIDENCE TWO-STORY ADDITION

38 E. CRESCENT AVENUE ALLENDALE, NEW JERSEY

PROJECT 181287
APRIL 18, 2019

HARRY J. GOLDSTEIN
ARCHITECT

N.J.S. LICENSE NO. AI 14353
NOT VALID UNLESS SIGNED & SEALED

HARRY J. GOLDSTEIN
ARCHITECT
DESIGN & DEVELOPMENT

4 REGINA ROAD
MONSEY, NEW YORK 10952
(845) 356-7942 (914) 393-5787

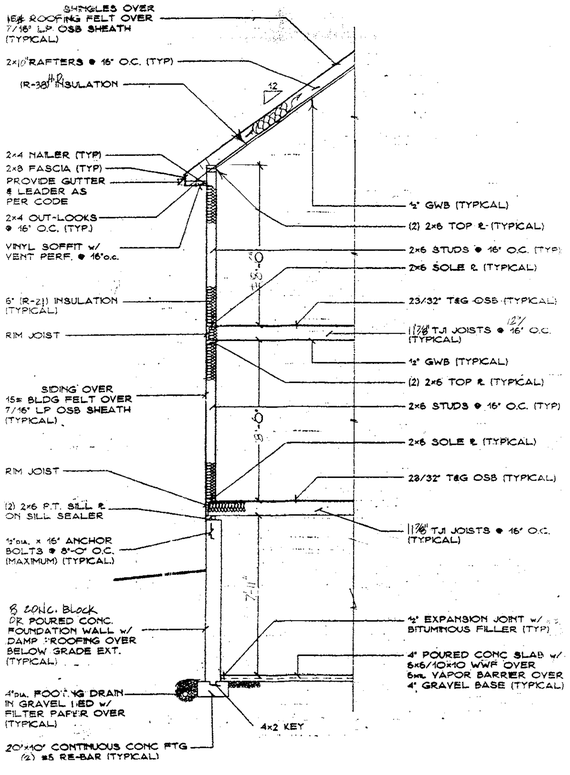

TYPICAL WALL SECTION

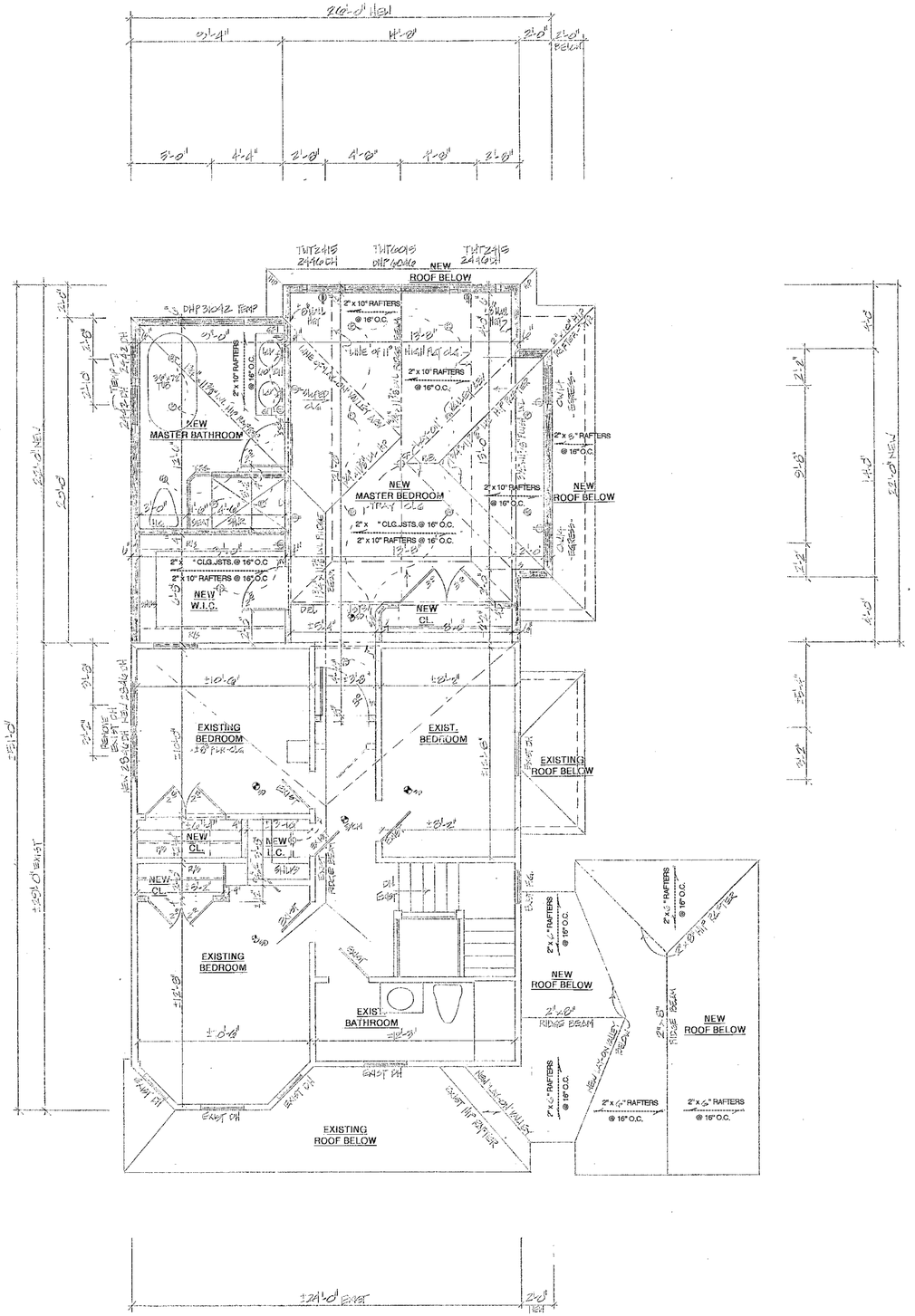

SECOND FLOOR PLAN

EXIST.S.F. :600; NEW S.F. :538
TOTAL SECOND FLR. S.F.: 1138

SCALE: 1/4" = 1'-0"

NEW OVERALL TOTAL
LIVING S.F. :2345

GENERAL SPECS.CONTIN.

FRAMING

32. ALL LUMBER MATERIALS USED IN THE BUILDING SHALL BE GOOD, SOUND, DRY MATERIAL, FREE FROM ROT, LARGE AND LOOSE KNOTS, SHAKES, AND OTHER IMPERFECTIONS WHEREBY THE STRENGTH MAY BE IMPAIRED AND OF SIZES INDICATED ON DRAWINGS. STUDS, SILLS, POSTS, LINTELS AND RAFTERS SHALL BE HEM-FIR (19% MAXIMUM GRADE EXCEPT IF NOTED OTHERWISE HEREINAFTER IN THIS SPECIFICATION OR ON THE DRAWINGS. THE MIN. UNIT STRESS FOR HEM-FIR SHALL BE:

FIBER STRESS (FB)	=	1500 PSI
HORIZONTAL SHEAR (FV)	=	95 PSI
MODULUS OR ELASTICITY (E)	=	1,400,000 PSI

WHERE INDICATED ON THE DRAWINGS WITH THE NOTATION FB=1500 ONLY DOUGLAS FIR-LARCH-NORTH (19% MAX. MOISTURE) NO. 1 GRADE SHALL BE USED WITH THE FOLLOWING MIN. UNIT STRESSES:

FIBER STRESS (FB)	=	1500 PSI
HORIZONTAL SHEAR (FV)	=	95 PSI
MODULUS OR ELASTICITY (E)	=	1,900,000 PSI

CALCULATED DESIGN LOADS (ADD 10 PSI DEAD LOAD ALL SPANS):

ROOF	30 PSI LIVE LOAD (40)
FLOORS	40 PSI LIVE LOAD (50)
ATTIC	20 PSI LIVE LOAD (30)
DECKS	60 PSI LIVE LOAD (70)

33. ALL SILL PLATES IN CONTACT WITH CONCRETE OR MASONRY WALLS, SLABS, ETC. SHALL BE PRESSURE TREATED LUMBER (UNLESS OTHERWISE NOTED). SILL SEAL SHALL BE OWENS CORNING SILL SEALER (OR APPROVED EQUAL). TERMITE SHIELD SHALL BE INSTALLED WHERE REQUIRED BY SITE CONDITIONS AND BUILDING CODES.

34. DOUBLE JOISTS SHALL BE INSTALLED UNDER ALL PARTITIONS RUNNING PARALLEL WITH SPANS AND AROUND ALL FLOOR OPENINGS. DOUBLE STUDS SHALL BE INSTALLED AROUND ALL WALL OPENINGS. ONE ROW OF SOLID BRIDGING AT MID-HEIGHT WITHIN ALL INTERIOR BEARING WALLS, DOUBLE FRAMING AROUND ALL SKYLIGHTS. ROOF AND FLOOR TRUSSES (TJI) AND L.V.L. (MICRO-LAM) TO BE INSTALLED IN STRICT COMPLIANCE WITH MANUFACTURER'S SPECIFICATIONS. FLOOR JOISTS SHALL RECEIVE CROSSBRIDGING AT 7'-0" O.C. MAXIMUM SPACING.

35. INTERIOR SUBFLOOR SHALL BE 3/4" TONGUE AND GROOVE SHEATHING GLUED AND NAILED (OVER PREFABRICATED FLOOR TRUSSES) OR TWO LAYERS OF 1/2" PLYWOOD LAID PERPENDICULAR TO EACH OTHER, WITH BUILDING PAPER BETWEEN LAYERS; GLUED AND NAILED TO FLOOR JOISTS. EXTERIOR SHEATHING SHALL BE 1/2" EXTERIOR GRADE APPLIED HORIZONTALLY WITH VERTICAL JOINTS STAGGERED 4'0". ROOF SHEATHING SHALL BE 1/2" EXTERIOR GRADE PLYWOOD, UNLESS OTHERWISE NOTED.

36. EXTERIOR WALLS SHALL BE 2" X 6" WOOD FRAMING. INTERIOR PARTITIONS SHALL BE 2"X 4" WOOD FRAMING. STUDS SHALL BE PLACED AT 16" ON CENTER (UNLESS OTHERWISE NOTED) AND RECEIVE BLOCKING AT MID-HEIGHT AS REQUIRED. STUDS AT GABLE ENDS UNDER CATHEDRAL CEILINGS SHALL RUN FULL HEIGHT FROM SOLE PLATE TO ROOF AND SHALL RECEIVE SOLID BLOCKING AT 6'-0" ABOVE FLOOR. ALL BEARING WALLS AND PARTITIONS SHALL RECEIVE BLOCKING AT MID-HEIGHT.

37. HEADERS OVER ALL DOORS, WINDOWS, AND OTHER OPENINGS UNDER 6'-0" SHALL BE (2) 2" X 10" (UNLESS OTHERWISE NOTED). HEADER OPENINGS 6'-0" TO 8'-0" SHALL RECEIVE (3) 2" X 10" OR (2) 2" X 12" HEADERS IN EXTERIOR WALLS, UNLESS OTHERWISE NOTED.

38. ALL EXTERIOR DECKS SHALL BE FRAMED WITH PRESSURE TREATED LUMBER (UNLESS OTHERWISE NOTED). LUMBER SHALL HAVE THE FOLLOWING MINIMAL STRESS: F 1900 PSI AND E 1,200,000 PSI AND SHALL BE SOUTHERN YELLOW PINE OR APPROVED EQUAL. GALVANIZED HEAVY DUTY POST BASES SHALL BE PROVIDED AT BASE OF ALL WOOD COLUMNS. DECK JOISTS SHALL RECEIVE DIAGONAL CROSS BRACE OR DIAGONAL DECKING. DECKING AND RAILS TO BE NON-TOXIC LUMBER, I.E. DOUGLAS FIR, CEDAR, OR EQUAL. RAILINGS TO BE CONSTRUCTED AT 36" HEIGHT AND WITH MAXIMUM 4" SPHERE OPENING, AS PER CODES.

39. ROOFING MATERIAL SHALL BE MINIMUM 20 YEAR FIBERGLASS SHINGLES (OWENS CORNING OR APPROVED EQUAL) OVER 15LB ROOFING FELT. VALLEY FLASHING AND OTHER APPROPRIATE FLASHING SHALL BE PROVIDED AS REQUIRED. ICE AND WATER SHIELD SHALL BE INSTALLED AS REQUIRED.

40. FASCIA BOARDS SHALL BE SCARFED AT A 45 DEGREE ANGLE OR 90 DEGREE ANGLE. FASCIA BOARDS SHALL BE COMMON PINE WRAPPED IN ALUMINUM, UNLESS OTHERWISE NOTED.

41. ALUMINUM GUTTERS AND LEADERS SHALL BE PROVIDED AS REQUIRED. SPLASH BLOCKS SHALL BE PROVIDED AT OUTLETS UNLESS OTHER PROVISIONS FOR WATER DISPERSION ARE PROVIDED. ALL WATER MUST DRAIN AWAY FROM STRUCTURE SO AS NOT TO CONTRIBUTE TO GROUND WATER SEEPAGE AT FOUNDATION.

DOORS AND WINDOWS

42. WINDOWS SHALL BE SIZE, TYPE AND MFG. AS INDICATED ON PLANS, WITH SCREENS AND HARDWARE PROVIDED. GLAZING LESS THAN 18" ABOVE FLOOR SHALL BE TEMPERED. OPTIONS SUCH AS GLAZING, GRILLES, COLORS, ETC., SHALL BE SELECTED BY OWNER AND/OR BUILDER PRIOR TO CONSTRUCTION. HEAD HEIGHT SHALL BE 6' – 10", UNLESS OTHERWISE NOTED.

43. EXTERIOR DOORS TO BE OF THE MANUFACTURER, TYPE, SIZE, AND STYLE AS INDICATED ON THE DRAWINGS. ANY MANUFACTURERS OPTIONS SHALL BE THE RESPONSIBILITY OF THE OWNER/CONTRACTOR UNLESS OTHERWISE INDICATED ON THE DRAWINGS. ALL DOORS SHALL BE 6'-8" HEIGHT UNLESS OTHERWISE NOTED. PROVIDE WEATHER STRIP SADDLE ON ALL EXTERIOR DOORS. PROVIDE ALUMINUM SADDLE ON ALL INTERIOR PERSONNEL GARAGE DOORS.

PLUMBING

44. ALL PLUMBING WORK SHALL BE IN ACCORDANCE WITH LOCAL HEALTH DEPARTMENT REQUIREMENTS AND SHALL BE SUBJECT TO THE APPROVAL OF THE PLUMBING INSPECTOR. PLUMBING WORK SHALL BE PROVIDED BY CONTRACTOR. BATHROOM FIXTURES SHALL BE KOHLER, AMERICAN STANDARD, OR APPROVED EQUAL. OWNER SHALL SELECT FIXTURES AND COLORS. PLUMBING FIXTURES TO BE MANUFACTURED BY _____ (OR EQUAL).

ELECTRICAL

45. ALL ELECTRICAL WORK SHALL CONFORM COMPLETELY TO THE REQUIREMENTS OF THE N.J.S.P.U. AND LOCAL UTILITY COMPANY. GROUND FAULT INTERRUPTS, DUPLEX RECEPTACLES, ETC., SHALL BE INSTALLED AS REQUIRED ACCORDING TO KITCHEN AND/OR BATH LAYOUTS AND CODE REQUIREMENTS.

HEATING / VENTILATING / AIR CONDITIONING

46. ALL HEATING AND AIR CONDITIONING WORK SHALL CONFORM COMPLETELY TO THE REQUIREMENTS OF THE LOCAL AND STATE BUILDING CODES. THE HEATING AND AIR CONDITIONING SYSTEM SHALL MEET ALL REQUIREMENTS OF THE NEW JERSEY STATE ENERGY CONSERVATION CONSTRUCTION CODE AS THEY APPLY.

THERMAL AND MOISTURE PROTECTION

47. APPLY FOUNDATION DAMPROOFING OR WATERPROOFING ON ALL BACKFILL FACES OF WALLS BELOW EARTH GRADE.

48. PROVIDE 15LB BUILDING FELT, "TYVEK", "TYPAR", OR EQUAL, BEHIND ALL SIDING, WINDOW, AND DOOR casings, NAIL TRIMS, ETC.

49. ALL EXTERIOR OPENINGS SHALL BE PROPERLY FLASHED, CAULKED, WEATHER STRIPPED OR OTHERWISE PROPERLY SEALED.

50. ALL EXTERIOR WALLS AND ROOFS SHALL BE INSULATED AS INDICATED ON PLANS AND AS PER CODES. INSULATION SHALL BE FOIL OR KRAFT FACED FIBERGLASS BATT INSULATION. RIDGE VENTS SHALL BE INSTALLED IN CATHEDRAL CEILINGS AS REQUIRED.

INTERIOR

51. ALL GYPSUM BOARD SHALL BE SCREWED ON CEILINGS AND/OR NAILED TO WALLS, TO RECEIVE THREE COATS OF SPACKLE, FINISHED TO RECEIVE TWO COATS OF PAINT, AND ONE COAT OF PRIMER, COLORS BY OWNER. BATHROOMS SHALL RECEIVE WATERPROOF SHEETROCK BEHIND TILE AREAS, AND WONDERBOARD OR APPROVED EQUAL BEHIND TILE IN BATH AND SHOWER AREAS.

52. FLOORING, TRIM, CLOSET SHELVING, CABINETRY, APPLIANCES, FIXTURES, HARDWARE, ETC., SHALL BE SELECTED BY OWNER AND INSTALLED BY BUILDER IN ACCORDANCE WITH MANUFACTURER'S SPECIFICATIONS.

53. INTERIOR DOORS SIZED AS INDICATED ON DRAWINGS, STYLE AND TYPE BY OWNER/CONTRACTOR.

54. CERAMIC TILE OR MARBLE FLOORS IN THE AREA INDICATED ON PLANS SHALL BE INSTALLED IN A "MUD" BASE.

55. OAK HARDWARE FLOORS SHALL BE INSTALLED MINIMUM 3 DAYS AFTER DELIVERY AND BUILDING TO BE HEATED. OAK FLOORS TO RECEIVE TWO COATS OF POLYURETHANE, GYM SEAL OR EQUAL.

56. STAIRS TO BE AS INDICATED ON DRAWINGS WITH A MINIMUM OF 9" TREAD, AND A MAXIMUM RISE OF 8". MATERIAL AND STYLE BY OWNER, UNLESS OTHERWISE INDICATED, AND SHALL BE INSTALLED AS PER STATE AND LOCAL CODES. ALL RAILINGS TO BE 36" HIGH (MINIMUM). STYLE AND MATERIAL TO BE SELECTED BY OWNER, AND SHALL CONFORM TO ALL STATE AND LOCAL CODES. (6" SPHERE MAXIMUM OPENING). ALL EXPOSED WOOD AND TRIM TO RECEIVE ONE COAT OF STAIN AND OPTIONAL TWO COATS POLYURETHANE.

REVISED
12/23/2021

PERGOLA RESIDENCE
TWO-STORY ADDITION

38 E. CRESCENT AVENUE
ALLENDALE, NEW JERSEY

PROJECT 181287
APRIL 18, 2019

HARRY J. GOLDSTEIN
ARCHITECT

N.J.S. LICENSE NO. AI 14353
NOT VALID UNLESS SIGNED & SEALED

HARRY J. GOLDSTEIN
ARCHITECT
DESIGN & DEVELOPMENT

4 REGINA ROAD
MONSEY, NEW YORK 10952
(845) 356-7942 (914) 393-5787

FRONT ELEVATION

SCALE: 1/4"=1'-0"

RIGHT SIDE ELEVATION

REAR ELEVATION

LEFT SIDE ELEVATION

USE GROUP: AA-RESIDENTIAL
CONSTRUCTION CLASS: 5B
NEW ADDITIONAL LIVING AREA:1090 S.F.
NEW ADDITIONAL CONTAINED VOLUME:9,465 C.F.

STATE OF NEW JERSEY ADOPTED CODES AND STANDARDS

INTERNATIONAL RESIDENTIAL CODE- NJ EDITION, 2018
NATIONAL ELECTRIC CODE, 2017
NATIONAL STANDARD PLUMBING CODE, 2018
INTERNATIONAL ENERGY CONSERVATION CODE, 2018 (RESIDENTIAL)
INTERNATIONAL MECHANICAL CODE, 2018
INTERNATIONAL FUEL GAS CODE, 2018
2018 RESIDENTIAL PRESCRIPTIVE PACKAGE

PERGOLA RESIDENCE TWO-STORY ADDITION

38 E. CRESCENT AVENUE ALLENDALE, NEW JERSEY

PROJECT 181287
APRIL 18, 2019
REVISED
12/23/2021

HARRY J. GOLDSTEIN
ARCHITECT

N.J.S. LICENSE NO. AI 14363
NOT VALID UNLESS SIGNED & SEALED

HARRY J. GOLDSTEIN
ARCHITECT
DESIGN & DEVELOPMENT

4 REGINA ROAD
MONSEY, NEW YORK 10952
(845) 356-7942 (914) 393-5787

THE DAVIES LAW FIRM, P.A.
45 Essex Street, Suite 3 West
Hackensack, New Jersey 07601
(201) 820-3460
Fax: (201) 820-3461
Email Address: AttyRFD@optonline.net

ROBERT F. DAVIES, ESQ.

FILE NO. 741

March 18, 2022

Ms. Linda Garofalo, Land Use Administrator
Borough of Allendale
500 West Crescent Avenue
Allendale, New Jersey 07401
Via New Jersey Lawyers Service

Re: 109 East Orchard Street, Allendale, New Jersey
Block 1901, Lot 10

Dear Ms. Garofalo:

This firm represents the owners of the above-referenced property.

I am enclosing my client's completed application for variances.

1. Notice of Appeal/Application for Variance, 2 pages plus 3 page Supporting Statement.

2. Application Checklist.

3. Required Material and Checklist, 3 pages long.

4. Notice of Public Hearing for Newspaper Notice - Hearing date blank.

5. Notice of Hearing to Property Owners, hearing date blank.

6. Affidavit of Proof of Service, blank, will be filled out once service is accomplished.

7. "Plot Plan, 109 E. Orchard Street, Lot 10 in Block 1901, Tax Map Borough of Allendale, Bergen County, New Jersey" prepared by Thomas G. Stearns, III, PE and LS, GB Engineering Engineering, LLC dated December 14, 2021 with revision dates through February 14, 2022.

8. Letter from Thomas G. Stearns, III, PE and LS, dated February 16, 2022, confirming that the property is not in the flood zone.

9. Architectural Plans "Proposed Single Family Dwelling, 109 East Orchard Street, Allendale, New Jersey" prepared by Nassir Almukhtar, RA, Heritage Madison Architecture, LLC dated October 4, 2021 with revision dates through January 24, 2022, consisting of 9 sheets.

I am further enclosing my client's filing fee in the amount of $500.00.

I would appreciate it if you could review the application for completeness, so that we may schedule this matter for a hearing and send out appropriate notices.

Thank you in advance for your assistance.

Very truly yours,

Robert F. Davies, Esq.

RFD/am
Encl.
cc: Clients

NOTICE OF APPEAL AND VARIANCE APPLICATION FORM
BOROUGH OF ALLENDALE, NEW JERSEY

TO THE APPLICANT: COMPLETE SECTIONS IN FULL FOR RELIEF REQUESTED

NOTICE OF APPEAL OF
ZONING ENFORCEMENT OFFICER'S DECISION

TO THE ZONING ENFORCEMENT OFFICER:

The petition of Shoaeb Raziuddin and Shaziya Shaikh
shows that on or about the 7th day of February, 20 22
an application to the Zoning Official for the purpose of (describe intended action) demolishing existing dwelling , constructing a new two story single family dwelling with walk out basement, new driveway, front walkway, rear patio, in ground swimming pool with patio surround.

on the premises located at (street address) 109 East Orchard Street
Block 1901 Lot 10
as shown on the Municipal Tax Maps and owned, or optioned, by the applicant was made; that after due consideration the Zoning Enforcement Officer did on the 7th day of February, 20 22 decline to issue said permit for the reasons stated in the attached copy of the Zoning Enforcement Officer's Refusal of Permit Form.

Applicant, feeling aggrieved at the action of the Zoning Enforcement Officer, files this notice of appeal with said Officer, together with the required fee of $500.00, and requests that action of the Zoning Enforcement Officer be reversed or modified as the facts may be determined, and applicant further requests that a day be fixed for hearing on this appeal and states that the proper notice will be given to all owners of property situated within two hundred (200) feet of the property specified above, and others as required by Statute.

APPLICATION FOR VARIANCE

TO THE LAND USE BOARD:

An application is hereby made for a (Hardship) ~~(Floor Area Ratio)~~ (Use) variance from the terms of Article(s) and Section(s) Borough Ordinances 270-64-B(2) and 270-54A
of the Zoning Ordinance so as to permit sideyard required is 33.01 ft., proposed is 20.5 ft. right side and 32.5 left side.
Structure height maximum permitted is 35 feet; proposed is 39.73 feet including walk out basement.
Height to grade is only 32 feet.

Signature of Applicant
Shoaeb Raziuddin

Shaziya Shaikh

DESCRIPTION OF PROPOSED STRUCTURE OR USE

PREMISES AFFECTED known as Lot(s) 10 Block(s) 1901
Street Address 109 East Orchard Street, Allendale, NJ 07401
Applicant Shoaeb Raziuddin and Shaziya Shaikh Address 501 Whitney Lane, Allendale, NJ 07401
Owner Same Address
Lessee Address
Last Previous Occupancy
Size of Lot 22,044
Floor area ratio calculation 21.6%
Percentage of lot occupied by building(s) 11.2%
Height of building(s) 2 and 1/2 stories 32 feet
Set back from front property line 43 ft. From side (if corner lot) ft.
Zoning requirements – Frontage 115, side yards 20.5, 32.5 set-back 43, rear yard 93.36
"Prevailing set-back" of adjoining buildings within one block 40
Has there been any previous appeal involving these premises? No
If so, state character of appeal and date of disposition

Proposed use: Single Family dwelling

This application for a use variance includes an application for subdivision_____, site plan _____, conditional use_____approval.

ATTACHED HERETO AND MADE A PART OF THIS APPLICATION I SUBMIT THE FOLLOWING: (NOTE: All of these papers must be submitted with application.)

(a) The original Zoning Review Application, signed by the Zoning Officer and/or a true copy of the Official order issued by the Zoning Officer and signed by him, where applicable.
(b) Fifteen (15) copies of all application documents
(c) Fifteen (15) copies of a map showing all lots within 200 feet of the property; if buildings exist thereon the map shall be a certified "location map" and clearly indicate such buildings and their approximate location, together with "prevailing set-back" dimensions.
(d) Fifteen (15) copies of a Plot Plan and clearly indicate such buildings thereon with all front, side and rear yard dimensions.
(e) Fifteen (15) copies of List of Property owners served, indicating method of service on each, date of service, together with copies of the post office receipts, if any.
(f) Fifteen (15) copies of Subdivision, Site Plan, or Conditional Use application, when applicable.

(File all copies with the Land Use Administrator when only a variance is sought.)

Date:_____

Signature of Applicant or Agent
Shoaeb Raziuddin

Shaziya Shaikh

Allendale Board of Adjustment

Application of Mr. Shoaeb Raziuddin and Dr. Shaziya Shaikh
Property Address: 109 East Orchard Street, Allendale, New Jersey
Block 1901, Lot 10

Variances Sought: Side Yard Setbacks; Height Variance

SUPPORTING STATEMENT

Mr. Shoaeb Raziuddin and Dr. Shaziya Shaikh, husband and wife, applicants and owners of 109 East Orchard Street, Allendale, New Jersey, have recently purchased the property.

The property is in the AA Residential Zone District. The property is undersized, being 22,044 square feet where 26,000 square feet is required. It is also deficient in width, being 115 feet wide where 130 feet is required. These deficiencies existing long prior to the Applicants purchasing the property.

They wish to demolish the existing dwelling, which was constructed approximately 1962, and replace it with an attractive new dwelling. The Applicants are applying for side yard setback variances, as well as a height variance. They wish to remove the now aging existing split level framed dwelling, and replace it with a two story (with an attic) framed dwelling. At the same time, they will construct a new driveway, a new front walkway from the driveway to the front door, and a rear patio and an in-ground swimming pool. There will be drywells installed to control runoff, and additional landscaping to screen the pool area, and a new fence around the rear yard.

The property is undersized, because it is only 115 feet where the AA Residential Zone District requires 130 feet width. Applicants are requesting variances for the side yard setbacks.

The existing dwelling does not comply with the current requirements for side yard setbacks. The house which Applicants propose will be set back FURTHER from the side property lines than the existing dwelling. Applicants are improving this situation, and setting the new house further from the property lines than what currently exist. Currently, the side yard setback is 19.72 feet at the right side of the dwelling (southeast side property line). The new dwelling will be set back 20.5 feet.

The setback on the left side (northwest side property line) is currently 30.98 feet. Applicants will increase this setback to 32.5 feet.

Borough Ordinance 270-64B(2) requires a side yard setback of 33.01 feet. In view of the

narrowness of the lot, this would require the new dwelling to be extremely narrow. The building envelope would simply be too narrow to accommodate a correctly proportioned building. The proposed dwelling is modest in size, and proportioned to fit Applicant's property.

For these reasons, Applicants would ask that the side yard variances be granted.

Applicants are seeking a height variance. The actual height of the proposed dwelling is only 32 feet from grade level to peak. However, Applicants are seeking permission to have a walkout basement stairway, leading from the basement out onto the rear yard. This will allow much easier access from the rear yard, patio and pool area, to the basement of the house. It will make the basement much more useable for the Applicants and their children.

Applicants have been informed that if this walkout basement stairway is constructed, then the height of the building will be measured from peak of the roof down to the landing pad at the bottom of the basement stairs. This creates a measured height of 39.73 feet, despite the fact that the house itself is only 32 feet in height.

Applicants realize that they could install a steel door over the basement stairway, closing it off and making the height of the dwelling as measured in accordance with the Zoning Ordinance, as being only 32 feet. The height would then be fully compliant with the Borough's Zoning Ordinance.

Applicants believe that these steel doors would be visually unattractive, would impede access and the use of the basement stairway, and should be avoided.

Applicants propose instead an attractively constructed walkway leading into the basement, screened by a low proposed wall. The stairway then should be effectively invisible from any neighboring property, and would have no negative visual or other negative impact of any kind on the adjoining properties.

Applicants wish to avoid installing steel basement doors, which would be nothing short of an eyesore.

The zoned district permits a maximum height of 35 feet. This is therefore a variance of 4.73 feet. Because this variance is more than ten percent of the permitted height, this triggers a 'use' variance under Section 40:55D-70(d)(6). Applicants believe that they meet the legal requirements for this Board to grant this 'use' variance.

Applicants must show 'special reasons' for the grant of the use variance.

Applicants believe that there are sufficient "special reasons" supporting the grant of this use variance. These reasons include promoting a desirable visual environment (per NJSA 40:55D-2(I); promoting appropriate development of land in the Borough (per NJSA 40:55D-

2)(a); and also allowing additional light and air for the basement of the new dwelling (per NJSA 40:55D-2(c).

Applicants must also show that the proposed construction is not inconsistent with the intent and purpose of the Borough Master Plan and the Borough Zoning Ordinance.

Applicants believe that a screened stairway leading into the basement is not inconsistent with the intent and purpose of the Borough Master Plan and the Borough Zoning Ordinance. The intent and purpose of the height restriction is to prevent construction of dwellings that are inappropriately tall for the zone district. Allowing a screened basement stairway will not contradict that purpose.

Applicants must also show that it will also have no negative impact on adjoining properties. The stairway will be screened by a low wall, and almost not visible from adjoining properties. It will therefore meet the requirements of the 'negative criteria' set out in NJSA 40:55D-70, final paragraph.

For these reasons, Applicants ask that the requested variances be granted.

ALLENDALE LAND USE BOARD
APPLICATION CHECK LIST

NAME Shoaeb Raziuddin and Shaziya Shaikh BLOCK 1901 LOT 10

ADDRESS 109 East Orchard Street

ZONE AA Zone TYPE OF VARIANCE use (height over 10%) and bulk variances

BRIEF DESCRIPTION OF APPLICATION Applicants will remove existing dwelling and construct a new single family dwelling with a walk out basement, new driveway, front walkway, rear patio, and in-ground swimming pool with patio surround

SPECIFIC VARIANCE(S) REQUIRED side yard setbacks required 33.01 feet, proposed 20.5 right side and 32.5 feet left side; structure height maximum permitted is 35 feet height, proposed is 39.73 feet including the walk out basement stairway. The height variance exceeds 10% of maximum permitted, and is therefore a use variance. See NJSA 40:55D-70(d)(6)

ADMINISTRATIVE REQUIREMENTS		STATUS
1.	Application form complete	
2.	Fee paid	
3.	Denial by Building Inspector	
4.	Affidavit of Service	
5.	Proof of Publication	
6.	Taxes Current	
7.	Plot Plan	
8.	Maps	
9.	Photographs	
10.	Email address	
11.	Miscellaneous	

Date

Applicant's Signature

Shoaeb Raziuddin

Shaziya Shaikh

REQUIRED MATERIALS AND CHECKLIST FOR
ALLENDALE LAND USE BOARD HEARINGS

This checklist and attached sample drawings are provided to ensure that you or your professionals are prepared for your hearing and that your application is complete. All items should be supplied to the extent that they are applicable to the specific application. If information is insufficient or missing, the board may deem your application incomplete and adjourn your hearing until it receives all necessary documentation. Please create 15 packets of the below information.

I. PROVIDE AN ACCURATE SURVEY FOR THE PROPERTY IN QUESTION WHICH CONTAINS THE FOLLOWING INFORMATION:

____ 1. Footprint of existing buildings or structures.

____ 2. Precise distances from all property lines to closest point of principal building including steps, deck or other extensions of the building.

____ 3. The location and precise distances of accessory buildings, such as garages and sheds, to property lines and the principal building or structure.

____ 4. The location and dimensions of steps, patios, driveways, decks, pools and all other improved impervious areas and their precise distances to nearest property line and structures.

____ 5. An accurate depiction of the proposed construction or alteration including the information requested in 1, 2, 3 and 4 above.

____ 6. The precise distances from all property lines to the closest point of the proposed construction.

II. AN ENLARGED TAX MAP DEPICTING PROPERTY IN QUESTION AND ITS RELATIONSHIP TO NEIGHBORING PROPERTIES.

____ 1. The precise distances from the existing buildings or structure in question to the closest point of all neighboring buildings and structures.

____ 2. The precise distances from the proposed construction to the closest point of all neighboring buildings and structures.

III. STRUCTURAL DIMENSIONS:

____ 1. All dimensions of existing building or structure.

____ 2. All dimensions of proposed building or structure.

____ 3. Height of existing building or structure.*

____ 4. Height of proposed building or structure.*

*(height to be measured from lowest point of the ground that abuts the foundation of the structure to the highest point on the roof.)

____ 5. Front, rear and side elevations of the proposed structure.

IV. FLOOR PLANS.

____ 1. Floor plans of the existing interior of the building containing all relevant dimensions.

____ 2. Floor plans of the interior of the proposed construction containing all relevant dimensions.

____ 3. Precise square footage of the existing building.

____ 4. Precise square footage of the proposed construction.

____ 5. Floor area ratio calculation pursuant to Section 270-63 of the zoning ordinance (required for all applications)

V. PHOTOGRAPHS.

____ 1. Photographs of the property in question and existing improvements may be helpful to the Board in presenting your information.

____ 2. Photographs of views from the existing building or structure to neighboring properties and buildings which show existing plantings or other buffers are also helpful and may be requested by the Board.

(All photographs should be taken by you or someone who can testify to the Board as to when they were taken and that the photographs represent an accurate depiction of what they saw at the time.)

VI. LANDSCAPING AND LAND FEATURES.

____ 1. The survey, plat or plan should locate and describe any proposed landscaping to be done in connection with the application.

____ 2. The location of any unusual property features should be indicated, such as flood plain, streams, wooded areas, rock outcroppings or steep slopes.

VII. PREVIOUS APPLICATIONS.

____ 1. Applicants should be prepared to discuss prior applications to the Land Use Board, Board of Adjustment and Planning Board and the results thereof.

VIII. Any additional information which may be deemed necessary by the Land Use Board, its Consultants or Borough departments and agencies.

NOTE: ALL DIMENSIONS AND DISTANCES MUST BE DEPICTED TO SCALE ON DRAWINGS AND PLANS.

Any questions regarding your hearing or the checklist should be directed to the Land Use Administrator at the Borough of Allendale Municipal Building 201-818-4400 x202. Please submit fifteen (15) packets with copies of all drawings and plans to the Land Use Administrator at least ten (10) days prior to the hearing. It is suggested that the property owner refer to the appropriate building code to assure proper engineering and construction techniques, or to secure the services of a local, reputable architect and/or engineer.

Date

Signature

Shoaeb Raziuddin

NEWSPAPER NOTICE

LAND USE BOARD

BOROUGH OF ALLENDALE

NOTICE OF PUBLIC HEARING

NOTICE IS HEREBY GIVEN that the Land Use Board of the Borough of Allendale will hold a public hearing on _____, 20_____, at 7:30 p.m. in the Allendale Municipal Building, 500 West Crescent Avenue, 2nd Floor, Allendale, New Jersey 07401 on the application of Shoaeb Raziuddin and Shaziya Shaikh (Applicant) at 109 East Orchard Street, Allendale, NJ (Address)

Block No. 1901, Lot No. 10 for a (hardship, ~~floor area ratio~~, use) variance from Section Borough Ordinances 270-64-B(2) and 270-54A

_____ of the zoning ordinance of the Borough of Allendale, and for any other variances or waivers that the Board may deem necessary, for the purpose of demolishing existing dwelling constructing new two story single family dwelling with walk out basement, new driveway front walkway, rear patio, in ground swimming pool with surround.

Proposed dwelling height is 39.73 feet where 35 feet is maximum permitted.

Proposed sideyard setbacks are 20.5 feet right side, 32.5 feet left side, where 33.01 feet is required.

Name and Address of Applicant
Shoaeb Raziuddin and Shaziya Shaikh
501 Whitney Lane
Allendale, NJ 07401

Sample Legal Notice

To be published in *The Record* or *The Ridgewood News* at least ten (10) days prior to the scheduled hearing date.

Original notice cut from newspaper must be given to Board Secretary along with all forms.

BOROUGH OF ALLENDALE

LAND USE BOARD

DATE_____

NOTICE OF HEARING TO PROPERTY OWNERS

(Cross out inapplicable sections)

TO WHOM IT MAY CONCERN:

In compliance with the Zoning Ordinance of the Borough of Allendale, NJ, notice is hereby served upon you to the effect that (I) (We) Shoaeb Raziuddin and Shaziya Shaikh hereby propose to (give detailed information) demolish existing dwelling and construction of a new single family dwelling with walk out basement, new driveway, front walkway, rear patio, and inground swimming pool with patio surround.

Location 109 East Orchard Street, Allendale, NJ Block 1901 Lot 10

The Zoning Officer of the Borough of Allendale, Bergen County, New Jersey, refused this request by reason of its being in violation of Section Borough Ordinance 270-64B(2) and Borough Ordinance 270-54A of the Zoning Ordinance, from which decision ~~(I) (We) hereby appeal~~. (I)(We) have applied to the Land Use Board for a (hardship), ~~(floor area ratio)~~, (use) variance, ~~[illegible]~~, and from any other variances or waivers that the Board may deem necessary.

Any person or persons affected by this ~~(appeal)~~ (application) may have an opportunity to be heard at the meeting to be held _____, 20___, at 7:30pm in the Allendale Municipal Building, 500 West Crescent Avenue, 2nd Floor, Allendale, NJ 07401.

All documents relating to this application may be inspected by the public between the hours of 9 a.m. and 4:30 p.m. in the office of the Borough Clerk in the Allendale Municipal Building, 500 West Crescent Avenue, Allendale, New Jersey 07401.

_____
Signature
Shoaeb Raziuddin

_____
Shaziya Shaikh

Note: This Notice must be personally Served or sent by certified or registered mail at least 10 days before the day of the hearing, and proof of service given to the Land Use Administrator.

AFFADAVIT OF PROOF OF SERVICE

LAND USE BOARD

OF

BOROUGH OF ALLENDALE

PROOF OF SERVICE OF NOTICES REQUESTED BY STATUTE MUST BE FILED AND VERIFIED WITH BOARD SECRETARY AT LEAST 10 DAYS PRIOR TO MEETING OR CASE WILL NOT BE HEARD.

STATE OF NEW JERSEY)

COUNTY OF BERGEN) SS.

_____, of full age, being duly sworn according to law, deposes and says, that (s)he resides at _____ in the municipality of _____, County of _____, and State of _____, and that (s)he is (are) the applicant(s) in a proceeding before the Land Use Board of Allendale, New Jersey, being an appeal or application under the Zoning Ordinance, which relates to premises at _____, and that on _____, 20___ (s)he gave written notice of the hearing on this application to each and all of the persons upon whom service must be made, in the required form and according to the attached lists, and in the manner indicated thereon.

_____

Applicant's Signature

Sworn to and subscribed before me

this _____ day of _____,

20___.

_____

NOTICE TO APPLICANT: Attach list of all persons served.

GB ENGINEERING, LLC

Engineering ▪ Surveying

144 Jewell Street ▪ Garfield, NJ 07026 Tel: 973-340-0948 ▪ Fax: 973-340-0015

FEBRUARY 16, 2022

SHOAEB RAZIUDDIN
109 E. ORCHARD STREET
ALLENDALE, NJ 07401

RE: LOT: 10 IN BLOCK 1901
NEW SINGLE FAMILY
109 East Orchard Street
ALLENDALE, NJ
RAZIUDDIN – FLOOD DETERMINATION

Dear Mr. Raziuddin:

This letter is to confirm that the above referenced property and proposed dwelling is clear of the Flood Zone. The property is shown to be in Zone X (clear of the Flood) as per FIRM Map Panel: 34003C0088J dated 08-28-2019.

Sincerely,

THOMAS STEARNS, III, PE & LS
GB ENGINEERING, LLC

THOMAS G. STEARNS III
N. J. PROFESSIONAL ENGINEER & SURVEYOR
N. J. LICENSE NO. GB40959

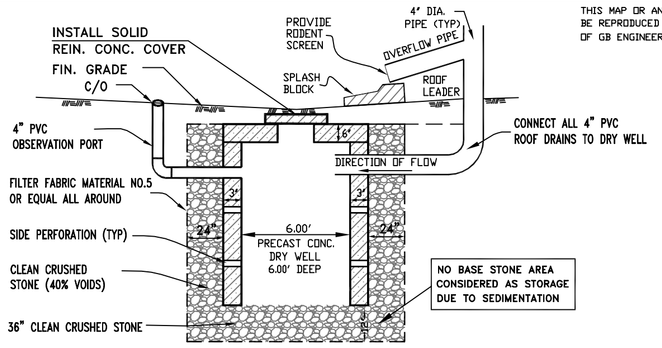

NOTE : SOIL TEST DONE AT TIME OF CONSTR. RESULTS to BOROUGH ENGINEER

PRECAST DRY WELL (TYP.2)

(NO SCALE)

DRY WELL NOTES:

1. DRY WELL TO BE INSPECTED NOT LESS THAN TWICE A YEAR AND AFTER EACH 2 INCH RAINFALL EVENT. THE OPERATION, INSPECTION, MAINTENANCE, AND REPAIRS FOR THE DRY WELLS ARE THE RESPONSIBILITY OF THE PROPERTY OWNER.
2. ALL SOIL ASSUMPTIONS ARE TO BE FIELD VERIFIED.

NOTE : SOIL LOG AND PERCOLATION TEST TO BE PERFORMED AT THE LOCATION OF THE PROPOSED DRY WELL. DRY WELL MUST BE INSPECTED BY THE BOROUGH OF ALLENDALE ENGINEERING DEPARTMENT PRIOR TO BACKFILL. 48 HOURS NOTICE IS REQUESTED. RESULTS OF THE TEST TO BE SUBMITTED TO BOROUGH ENGINEER.

NOTE : DRY WELL MUST BE INSTALL 2 FEET ABOVE THE SEASONAL HIGH GROUNDWATER TABLE (SHGW). DRY WELL MUST BE PROTECTED DURING CONSTRUCTION TO PREVENT ACCUMULATION OF SEDIMENT.

LEGEND

EXISTING FEATURES

- Right of Way Line
- Curb Line
- Concrete Sidewalk
- Sanitary Sewer Main
- Sanitary Manhole
- Gas Main
- Gas Valve
- Water Main
- Water Valve
- Existing Grade
- Contour Elevation Line

PROPOSED FEATURES

- FIN. GRADE
- PROP. PVC ROOF DRAINS
- PROP. CONCRETE CURB
- PROP. DRY WELL
- PROP. WATER VALVE
- PROP. GAS VALVE
- PROP. CONTOURS
- SWALE

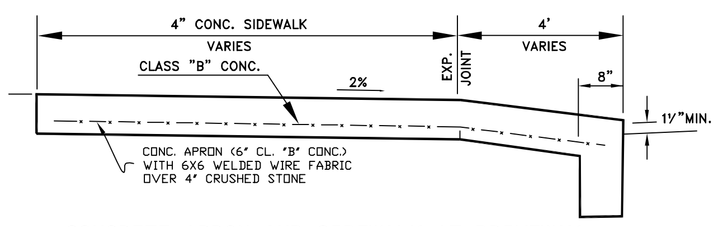

CONCRETE APRON AND SIDEWALK AT DRIVEWAY

(NO SCALE)

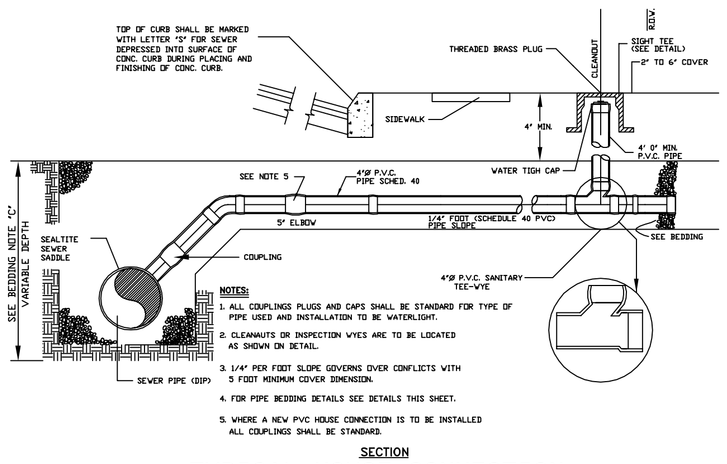

SECTION

TYPICAL HOUSE CONNECTION

THIS SITE PLAN HAS BEEN APPROVED AT A MEETING OF:

PLANNING BOARD ☐ OF THE BOROUGH OF ALLENDALE

MEETING HELD ON:_____, 2022

CHAIRMAN _____ DATE _____ APPROVED:

SECRETARY _____ DATE _____ BOROUGH ENGINEER _____ DATE

THIS MAP OR ANY PART THEREOF NOT TO BE REPRODUCED WITHOUT WRITTEN CONSENT OF GB ENGINEERING, LLC AND/OR OWN © COPYRIGHT.

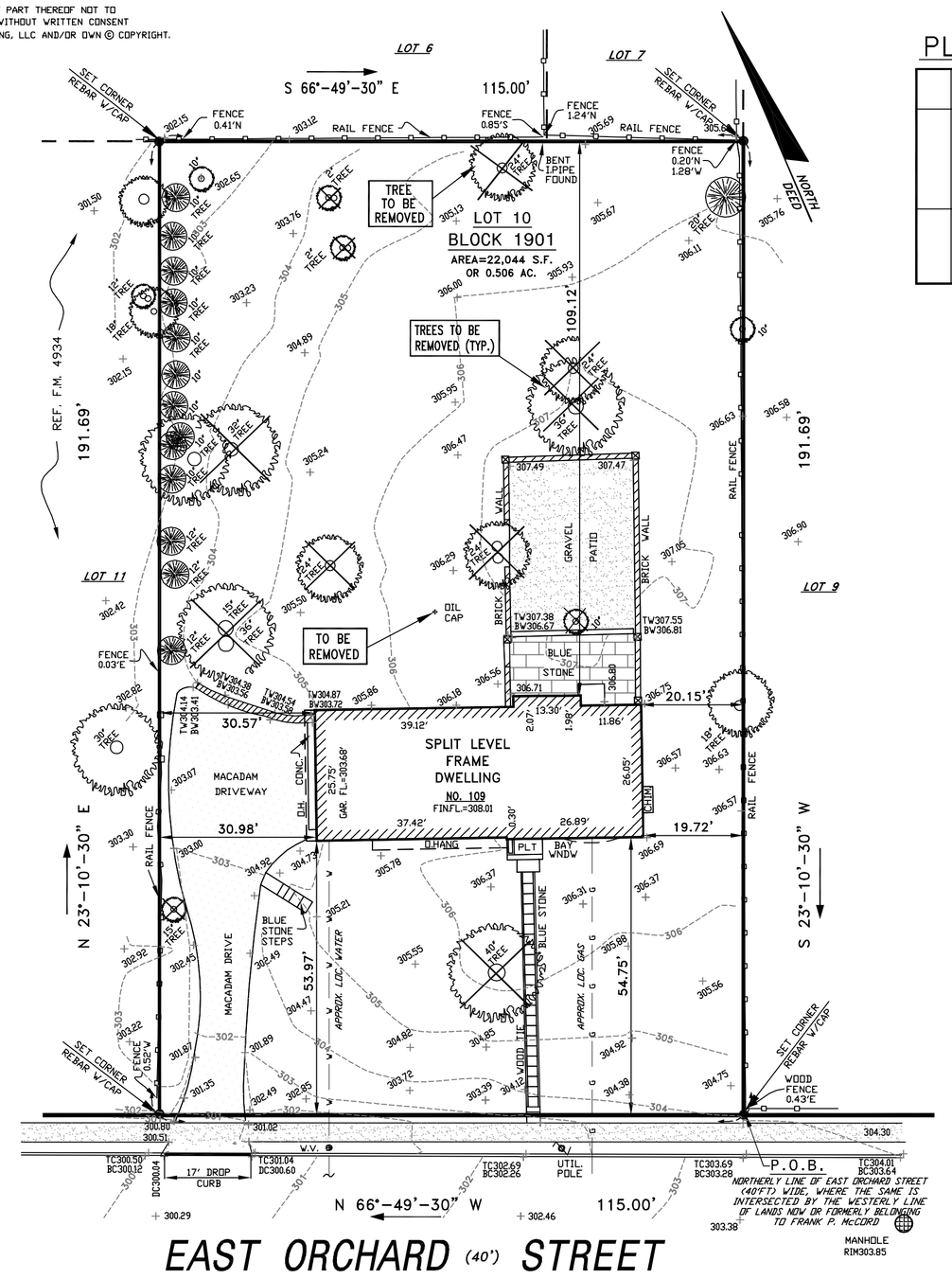

BOUNDARY & TOPOGRAPHY

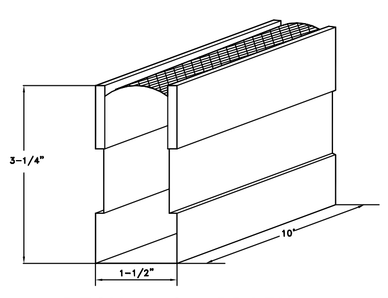

DECK - O- DRAIN

(NTS)

MADE BY ADVANCED SURFACES INC. OR EQUAL. WHITE # 110140

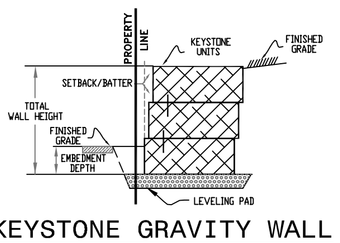

KEYSTONE GRAVITY WALL

(NO SCALE)

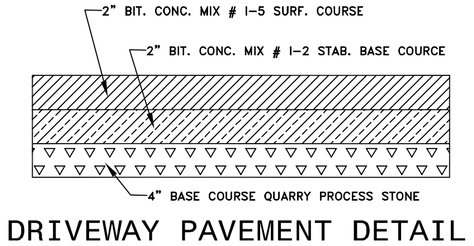

DRIVEWAY PAVEMENT DETAIL

(NO SCALE)

PLANT – LEGEND

SYMBOL	COMMON NAME	BOTANICAL NAME	SIZE/ROOT	QT.
	(TG) - THUJA GREEN GIANT	THUJA (STANDISHII X PLICATA)	6 FT.	36
	(BX) - THE DWARF ENGLISH BOXWOOD	BOXWOOD SEMPERVIRENS (SUFFRUTICOSA)	3 GAL.	12
	(HYD) - HYDRANGEA	HYDRANGEA	5 GAL.	3

NOTE:
SHRUBS MAY BE PLANTED IN TRENCHES INSTEAD OF PITS.

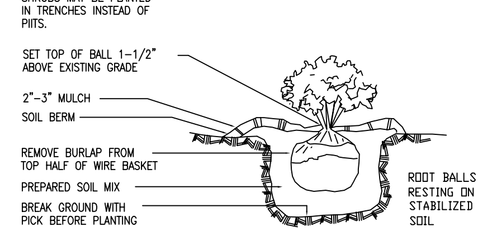

SHRUB PLANTING DETAIL

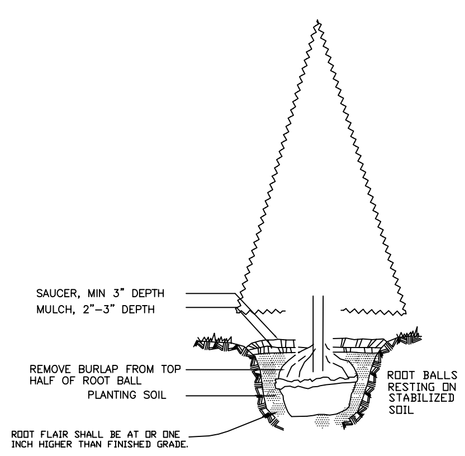

EVERGREEN PLANTING DETAIL

ALTHOUGH ABSOLUTE, OFFSET DIMENSIONS ARE NOT TO BE USED FOR PERMANENT CONSTRUCTION.

0 10 20 40 80

GRAPHIC SCALE

SOIL MOVING CALCULATIONS

FOOTING CUT

Location	Perimeter	Location	Perimeter	Total :	CY
Dwelling	225 lf	Garage	42 lf		
Front porch	54 lf	Rear plat./entr.	45 lf	366 lf	
-4 sf x 366 = -1464 cf.		FOOTING CUT		-1464 cf.	-54

PROPOSED CUT

Location	Area sf.	Avg. Elev.	Prop. Elev.	Δ/Height	Total in CF	CY
Basement	1839 sf	306.25 ft	298.67 ft	-7.58 ft.	-13940 cf.	
Pool	450 sf	306.17 ft	301.17 ft	-5.00 ft.	-2250 cf.	
Dry wells	174 sf	303.37 ft	297.04 ft	-6.33 ft.	-1101 cf.	
			PROPOSED CUT		-17291 cf.	-640

PROPOSED FILL

Location	Area sf.	Avg. Elev.	Prop. Elev.	Δ/Height	Total in CF	CY
Garage	640 sf	304.95 ft	305.67 ft	0.72 ft.	461 cf.	
Driveway area	4058 sf	303.45 ft	303.80 ft	0.35 ft.	1420 cf.	
Pool area	1380 sf	305.50 ft	306.00 ft	0.50 ft.	690 cf.	
			PROPOSED FILL		2571 cf.	95

NET CUT = FOOTING CUT + PROP. CUT + FILL

NET CUT = -1464 cf. + -17291 cf. + 2571 cf.

NET CUT = -16184 CF = -599 CY

EXISTING LOT COVERAGE SCHEDULE:

Dwelling	1804	SF.	8.2 %
Front Plat.	29	SF.	0.1 %
Driveway	1374	SF.	6.2 %
Gravel Patio	932	SF.	4.2 %
Blue-stone patio	325	SF.	1.5 %
Conc. features	197	SF.	0.9 %
TOTAL LOT COVERAGE:	4661	SF.	21.1 %

PROPOSED LOT COVERAGE SCHEDULE:

Dwelling	2479	SF.	11.2 %
Covered porch	275	SF.	1.2 %
Driveway	1858	SF.	8.4 %
Patio - rear	915	SF.	4.2 %
Front walk	230	SF.	1.0 %
Pool - patio	652	SF.	3.0 %
Pool area	450	SF.	2.0 %
Conc. features	411	SF.	1.9 %
TOTAL LOT COVERAGE:	7270	SF.	33.0 %

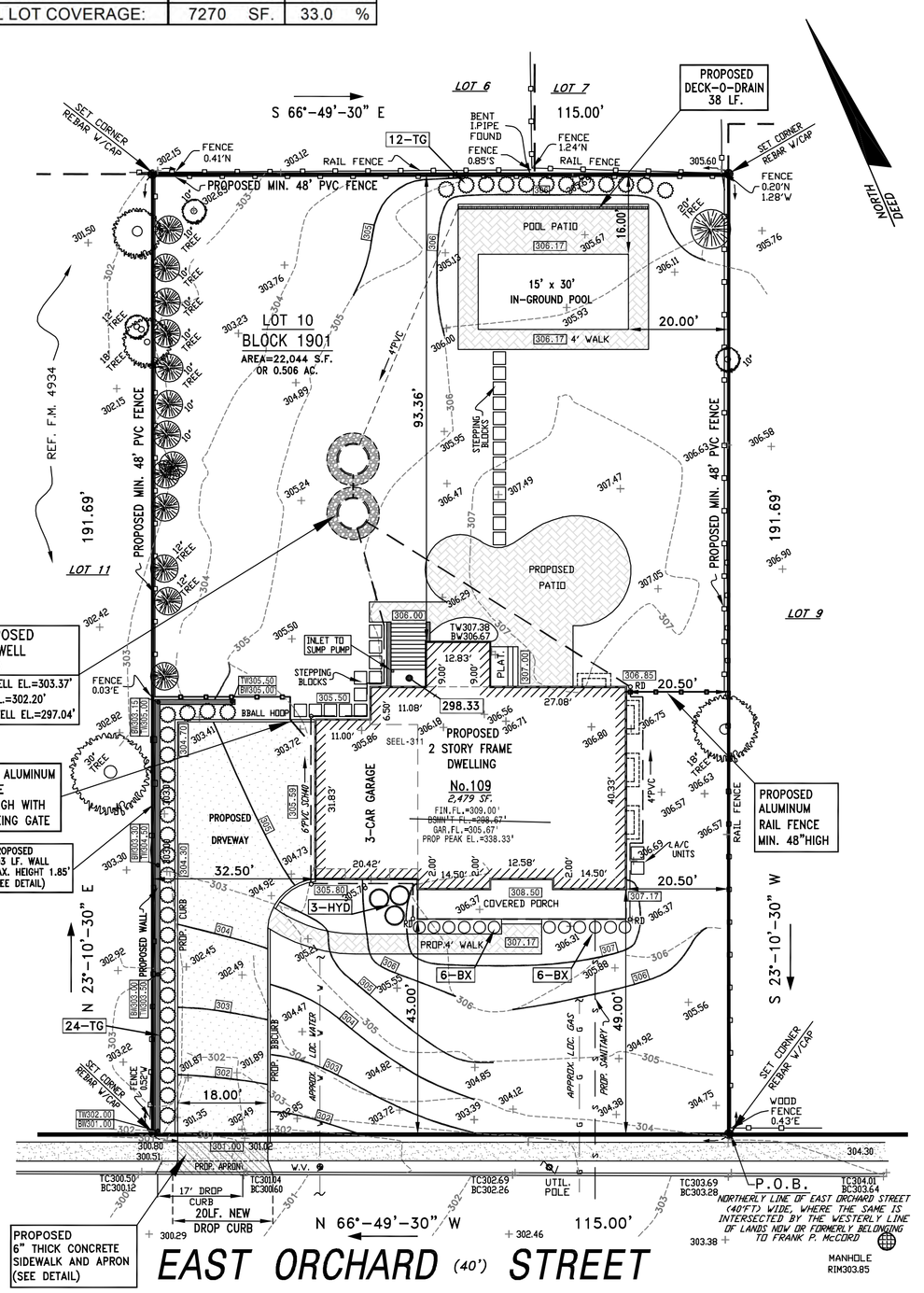

SITE PLAN DETAIL

GENERAL NOTES:

1. BEING A PROPOSED PLOT PLAN FOR LOT 10 IN BLOCK 1901 AS SHOWN ON THE TAX MAP OF THE BOROUGH OF ALLENDALE, BERGEN COUNTY, NEW JERSEY.
2. PROPERTY CONTAINS: 22,044 SF. OR 0.506 ACRES
3. THE PROPERTY LIES WITHIN "AA" RESIDENTIAL ZONE ONE-FAMILY HOMES ARE CONSIDERED A PERMITTED USE.

REQUIREMENTS:	"AA"	EXISTING	PROPOSED	VARIANCE
MIN. LOT AREA	26,000 SF	22,044 SF Ⓔ	22,044 SF Ⓔ	NO
MIN. LOT WIDTH	130 FT	115.00' Ⓔ	115.00' Ⓔ	NO
MIN. FRONT YARD	40 FT	53.97'	43.00'	NO
MIN. SIDE YARD	33.38 FT	19.72'/30.57'	20.50'/32.50' Ⓥ	YES
MIN. REAR YARD	50 FT	109.12'	93.36'	NO
MAX. IMP. COVERAGE	8,166.09 SF	4,661 SF	7,270 SF	NO
FLOOR AREA RATIO	22.59%	N/A	21.6%	NO
MAX. BLDG. HEIGHT	2½ STY./35 FT.	N/A	2½ STY./32 FT.	NO
POOL SIDE YARD MIN.	20 FT.	N/A	20.00'	NO
POOL REAR YARD MIN.	10 FT.	N/A	16.00'	NO
POOL TO STRUCTURE MIN.	20 FT.	N/A	63.36'	NO

Ⓔ = EXISTING NON-CONFORMITY
Ⓥ = VARIANCE REQUIRED

4. UNDERGROUND UTILITIES SHOWN ARE APPROXIMATE. EXACT LOCATIONS TO BE MARKED OUT AT TIME OF CONSTRUCTION.
5. REFER TO ARCHITECT PLANS FOR DETAILS.
6. PLAN BASED ON A SURVEY AND TOPOGRAPHY BY GB ENGINNERING LLC, DATED OCTOBER 18, 2021. ELEVATIONS BASED ON NAVD'88 DATUM.
7. ALL CONSTRUCTION TO BE IN ACCORDANCE WITH THE BOROUGH OF ALLENDALE STANDARDS & ORDINANCES.
8. PROPERTY IS LOCATED IN ZONE "X" AS PER FLOOD INSURANCE RATE MAP NO. 34003C0088 J, DATED AUGUST 28, 2019. BERGEN COUNTY, NEW JERSEY.
9. DRAINAGE FROM THIS PROPERTY SHALL NOT IMPACT ADJ. PROPERTIES PRIOR, DURING AND AFTER CONSTRUCTION. IN THE EVENT ADJ. PROPERTIES ARE IMPACTED, THE OWNER IS REQUIRED TO CORRECT THIS MATTER AT THEIR OWN EXPENSE.
10. PURPOSE OF THIS PROPOSED SITE PLAN IS FOR APPROVAL TO BUILD A NEW ONE FAMILY DWELLING.

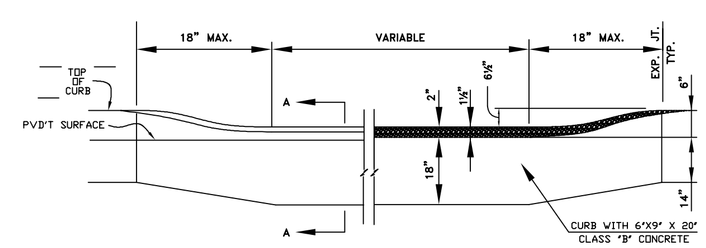

METHODS OF DEPRESSING CURB AT DRIVEWAY

(NO SCALE)

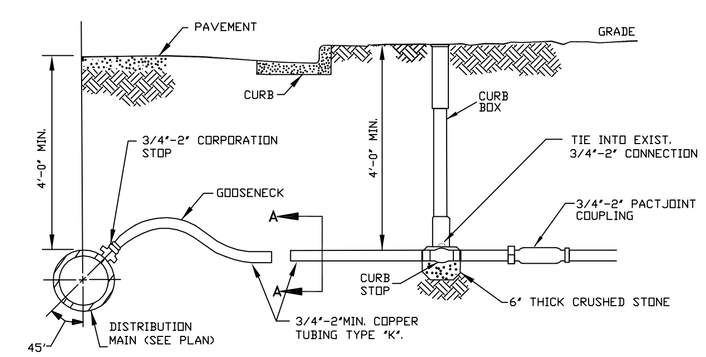

NOTES:

1. CORP. STOPS ARE TO BE STAGGERED, AT LEAST 12" APART & NOT CLOSER THAN 12" FROM END OF PIPE.
2. EXISTING WATER SERVICE NEEDS TO BE SHUT-OFF AT THE MAIN.
3. CORP. STOPS TO BE SHUT OFF ON ABANDONED MAIN WHERE NECECCARY AS DETERMINED BY THE ENGINEER.

TYPICAL WATER SERVICE HOUSE-CONNECTION INSTALLATION

NOT TO SCALE

THIS PLAN HAS BEEN PREPARED UNDER MY IMMEDIATE SUPERVISION
CERTIFIED TO: SHOAB RAZIUDDIN
CERTIFICATE OF AUTHORIZATION NO: 24GA-28110300

THOMAS G. STEARNS III – #GB40959
N.J. PROFESSIONAL ENGINEER & LAND SURVEYOR

OWNER:
SHOAEB RAZIUDDIN
PHONE: 201-421-5819
EMAIL: SHOAEB.RAZIUDDIN@GMAIL.COM

NO.	DATE:	REVISION:
2		
1	02/14/22	DWELLING FOOTPRINT –REVISED

MAP SHOWING

PLOT PLAN

109 E. ORCHARD STRET

LOT 10 IN BLOCK 1901 TAX MAP

BOROUGH OF ALLENDALE

BERGEN COUNTY NEW JERSEY

GB ENGINEERING, LLC
ENGINEERS & SURVEYORS
144 JEWELL STREET
GARFIELD, NEW JERSEY 07026
TEL (973) 340-0948 FAX (973) 340-0015

SCALE: 1"= 20'-0"
DATE: DECEMBER 14, 2021
SHEET NO. 1 of 1
FILE NO. 2021/1247

Van Cleef
ENGINEERING WITH FOCUS

111 Howard Boulevard, Suite 110
Mt. Arlington, NJ 07856
862-284-1100

MEMORANDUM

TO: Borough of Allendale Land Use Board
L. Garofalo, Land Use Administrator / C. Botta, Board Attorney

FROM: Michael Vreeland, Board Engineer

CC: S. Raziuddin & S Shaikh, Applicant / N. Almukhtar, Applicant's Architect / T. Stearns, Applicant's Engineer

RE: 109 East Orchard Avenue - Variance Application
Block 1901 Lot 10
Allendale Borough
VCEA Project No. ALN-1001.042

DATE: April 4, 2022

We are in receipt of the following information pertaining to the above-referenced application:

A. Application with Attachments;

B. February 7, 2022 Borough of Allendale Code Enforcement Office correspondence;

C. Plans entitled, "Proposed, Single Family Dwelling, 109 East Orchard Street, Allendale, New Jersey". The plans prepared by Heritage Madison Architecture, LLC (Nassir Almukhtar, RA) consist of 9 sheets and are dated with a latest revision date of January 24, 2022; and

D. Plan entitled, "Plot Plan, 109 E. Orchard Street, Lot 10 In Block 1901 Tax Map, Borough Of Allendale, Bergen County, New Jersey". The plan prepared by GB Engineering, LLC (Thomas G. Strearns III, PE, LS) is dated with a latest revision date of February 14, 2022.

We have reviewed the information along with the Borough Code (Code), visited the site, and offer the following comments:

1. INTRODUCTION

The subject property was developed with a split level dwelling and associated amenities. The dwelling has been razed and the site has been cleared. The application and plans propose to construct a 2 ½ story dwelling and associated amenities. The subject property is located within Allendale's AA (Residential) Zone.

The Applicant is seeking variance relief for conflicts with §270-54A and §270-64B of the Code.

2. TECHNICAL COMPLETENESS

We have reviewed this application for technical completeness in accordance with the Application Checklist. Based on this review we believe the Applicant has addressed each of the applicable technical checklist items.

We defer to the Land Use Administrator and the Board Attorney regarding administrative and legal completeness matters.

3. ZONING

We have reviewed this application in accordance with the requirements of the Borough's Code. Based on this review we find the following:

3.1. Non-Conforming Conditions:

3.1.1. §270-54A – Height
Comment: The height at the proposed basement stairway exceeds the maximum allowable height of 35 ft by more than 10%.

3.1.2. §270-54E – Lot Area
Comment: The existing lot area is ±3,956 sf less than the required 26,000 sf area. The subject application does not appear to alter this conditions.

3.1.3. 270-54F – Lot Width
Comment: The existing lot width is ±15 ft less than the required 130 ft width. The subject application does not appear to alter this condition.

3.1.4. §270-64B(2) – Side Yard Setbacks
Comment: The zone table on the plan indicates an enhanced side yard setback of 33.38 ft. **Calculations used to determine this requirement need to be included with the table.**

Assuming the value in the table is correct, the proposed dwelling will encroach ±12.9 ft (R) and ±0.9 ft (L) into the noted 33.38 ft enhanced side yard setback.

3.2. Discussion

Since this proposal does not meet the requirements noted above, the Applicant must seek relief from the Board pursuant to the Municipal Land Use Law under N.J.S.A. 40-55D-70d(6) (height of principal structure exceeds the maximum permitted height by 10%) and N.J.S.A. 40-55D-70c.

The Applicant has requested "D" & "C" variances in conjunction with this proposal.

3.2.1. "D" Variance

When considering a "d" variance, relief cannot be grant unless sufficient "special reasons" are shown and there is no substantial impairment of the intent and purpose of the zone scheme and zoning ordinance.

There is no precise formula as to what constitutes special reasons unless the use is determined to be inherently beneficial. Each case must be heard on its own circumstances. Generally, there are sufficient special reasons under two

broad circumstances: (1) where refusal to allow the use would impose an undue hardship and (2) when the project carries out a purpose of zoning as set forth in N.J.S.A. 40:55D-2.

A variance should only be granted if the Board, on the basis of the evidence presented before it, feels that the public interest, as distinguished from the purely private interests of the Applicant, would be best served by permitting the proposed use. In these instances, the Board must also find that the granting of the variance will not create an undue burden on the owners of the surrounding properties.

Furthermore, in most "d" variance cases, the Applicant must satisfy an enhanced quality of proof and support it by clear and specific findings by the Board that the variance sought is not inconsistent with the intent and purpose of the Master Plan and Zoning Ordinance.

3.2.2. "C(1)" or "Hardship" Variances

In judging an application by the C(1) criteria, the core question presented to the Board is whether there has been a showing of (1) peculiar and exceptional practical difficulties to, or (2) exceptional and undue hardship upon, the Applicant arising out of (a) the exceptional narrowness, shallowness or shape of the subject property, or (b) by reason of exceptional topographic conditions or physical features uniquely affecting the subject property, or (c) by reason of an extraordinary and exceptional situation uniquely affecting the subject property or the structures lawfully existing thereon. In all cases the alleged hardship must relate to a specific piece of property.

3.2.3. "C(2)" or "Benefits v. Detriments" Variances

In judging an application by the C(2) criteria, the core questions presented to the Board is whether the grant of a variance would promote or advance the purposes of the Municipal Land Use Law and the benefits of such deviation outweigh any detriment.

As in all variance cases, the Applicant bears the burden of proving both the positive and negative criteria. Relief cannot be granted unless it can be granted without substantial detriment to the public good and unless it will not substantially impair the intent and purpose of the zone plan and zoning ordinance.

We specifically note that it is the Applicant's burden to show the special reasons and satisfy the negative criteria. As such, the Applicant's qualified professionals will need to present additional information concerning the aforementioned issues as well as the positive and negative elements pertaining to the subject proposal.

4. RENOVATIONS

4.1. We assume the dwelling will be finished similar to the renderings. This should be confirmed by the Applicant;

4.2. We recommend additional landscaping be considered;

4.3. The plans do not include exterior lighting. The Applicant should confirm that additional lighting is not proposed or needed;

4.4. An oil cap is illustrated on the plan and noted to be removed. Based on information provided by the Construction Office, it is unclear if this was completed as part of the demolish work. This should be clarified by the Applicant; and

4.5. Should the Board approve this application:

4.5.1. The Applicant will need to obtain Bergen County Soil Conservation Certification;

4.5.2. The Applicant will need to obtain a Soil Movement Permit;

4.5.3. The Applicant will need to obtain Plot Plan Approval;

4.5.4. The Applicant will need to obtain a Street Opening Permit;

4.5.5. Water and sewer connections will need to be replaced;

4.5.6. A tree removal permit will need to be obtained for trees to be removed; and

4.5.7. We recommend an “As-Built Plan” be required.

PROPOSED

SINGLE FAMILY DWELLING

109 EAST ORCHARD STREET
BOROUGH OF ALLENDALE
COUNTY OF BERGEN, NEW JERSEY
LOT 10 BLOCK 1901

SCOPE OF WORK :
PROPOSED NEW CONSTRUCTION OF A SINGLE FAMILY DWELLING

CODES:
UNIFORM CONSTRUCTION CODE, STATE OF NEW JERSEY

IRC NEW JERSEY EDITION 2018

USE GROUP (EXISTING)	R-5
USE GROUP (PROPOSED)	R-5 (NO CHANGE IN USE)
CONSTRUCTION TYPE	5B
OCCUPANT LOAD	19 OCCUPANTS
NUMBER OF STORIES	2 STORIES
HEIGHT OF STRUCTURE	32.00 FT.
AREA OF LARGEST FLOOR	1,901 SQ.FT.
NEW BUILDING AREA	2,479 SQ.FT. (01)
VOUME OF NEW STRUCTURE	63,048 CU.FT.
MAX. LIVE LOAD	40 PSF

AREA & VOLUME CALCULATIONS

FLOOR	AREA	VOLUME
BASEMENT	1,842 SQ.FT.	19,028 CU.FT.
GARAGE	637 SQ.FT.	8,491 CU.FT.
FIRST FLOOR	1,842 SQ.FT.	18,420 CU.FT.
SECOND FLOOR	1,901 SQ.FT.	17,109 CU.FT.
TOTAL	6,222 SQ.FT.	63,048 CU.FT.

(01)

NOTE:
REFER TO ENGINEERING DRAWINGS FOR SITE PLAN INFORMATION.

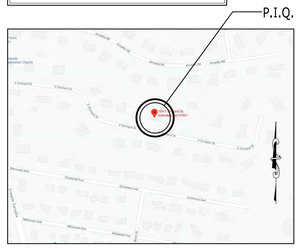

01 LOCATION MAP
SCALE: NOT TO SCALE

02 FRONT ELEVATION
SCALE: 1/4" = 1'-0"

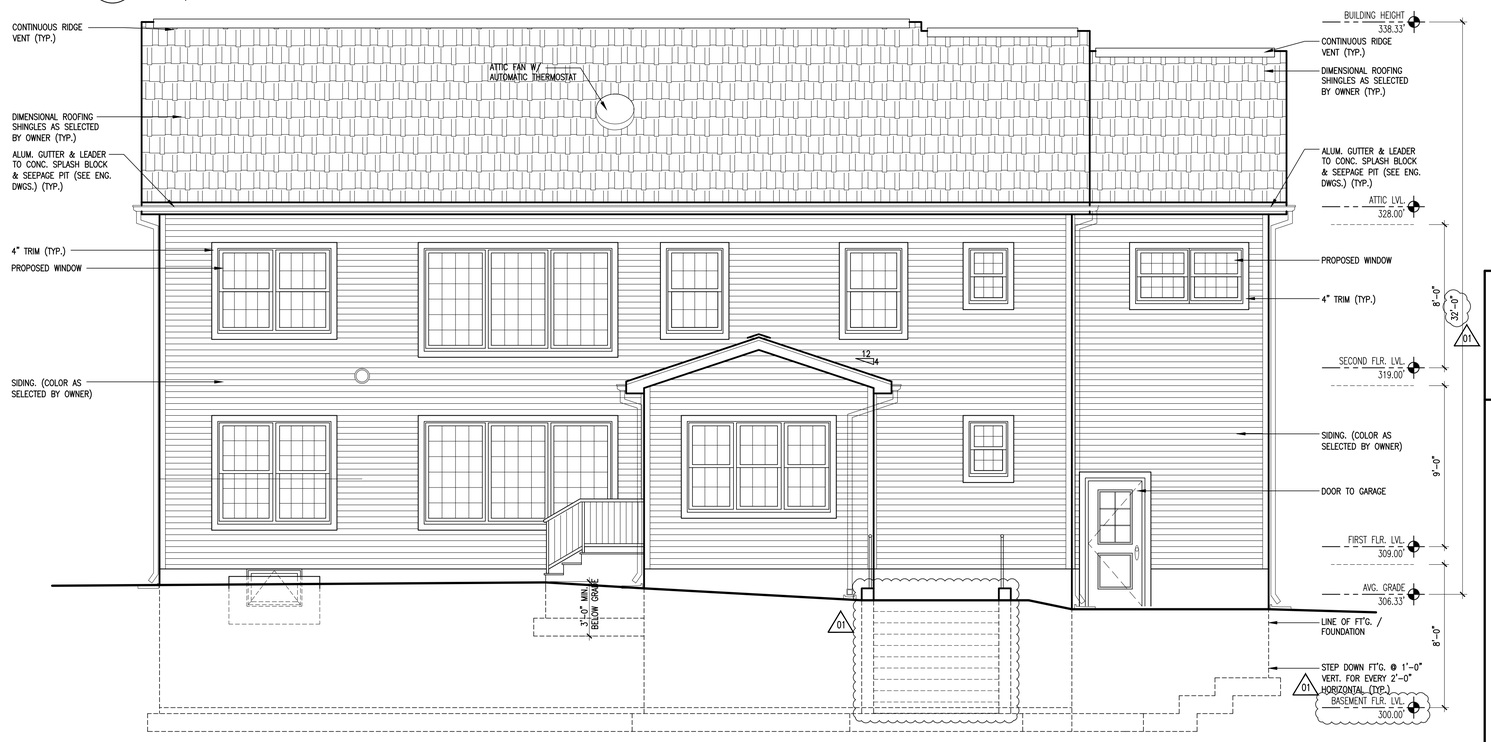

03 REAR ELEVATION
SCALE: 1/4" = 1'-0"

DRAWING LIST

T-01	TITLE, LOCATION MAP, AREA & VOLUME CALCULATIONS, ELEVATIONS, NOTES
A-01	BASEMENT (CONSTRUCTION), INTERIOR LOAD BEARING WALL DETAIL, WATER SUPPLY DIAGRAM, SANITARY RISER DIAGRAM, LEGEND & NOTES
A-02	FIRST FLOOR PLAN (CONSTRUCTION), CONCRETE STAIR DETAIL, LEGEND & NOTES
A-03	SECOND FLOOR PLAN (CONSTRUCTION), LEGEND, NOTES
A-04	ROOF PLAN, WALL SECTION, NOTES
A-05	ENGINEERED LUMBER DETAILS
A-06	ELEVATIONS
E-01	BASEMENT FLOOR PLAN (ELECTRICAL), LEGEND, NOTES
E-02	FIRST FLOOR PLAN (ELECTRICAL), SECOND FLOOR PLAN (ELECTRICAL) LEGEND, NOTES

GENERAL NOTES

1.1 ALL RIGHTS RESERVED DRAWINGS & SPECIFICATIONS AS INSTRUMENTS OF SERVICE REMAIN THE PROPERTY OF THE ARCHITECT COMMON LAW COPYRIGHT PROVISIONS. THEY ARE NOT TO BE REUSED EXCEPT AND ARE PROTECTED UNDER AGREEMENT IN WRITING AND WITH THE AGREED COMPENSATION TO THE ARCHITECT. IF REUSED WITHOUT PERMISSION, THE ARCHITECT SHALL BE INDEMNIFIED AND HELD HARMLESS FROM ALL LIABILITY, LEGAL EXPOSURE, CLAIMS, DAMAGES, LOSSES AND EXPENSES.

1.2 DRAWINGS SHALL NOT BE USED FOR ISSUANCE OF A BUILDING PERMIT UNLESS SIGNED AND SEALED BY THE ARCHITECT. DRAWINGS SHALL NOT BE USED FOR MULTIPLE OR PROTOTYPE DEVELOPMENT WITHOUT WRITTEN AUTHORIZATION FROM THE ARCHITECT BOTH SIGNED AND SEALED.

1.3 ARCHITECTS ADMINISTRATION OF THE CONSTRUCTION WORK BY MUTUAL CONSENT, IS NOT PART OF THIS AGREEMENT. THE OWNER AND/OR GENERAL CONTRACTOR SHALL APPOINT A PERSON TO BE IN CHARGE OF THE WORK PER "NJUCC 5.23-2.21 CONSTRUCTION CONTROL" EXECUTION.

1.4 THE ARCHITECT SHALL NOT BE RESPONSIBLE WHERE CONSTRUCTION DEVIATES FROM THESE DRAWINGS OR FROM WRITTEN RECOMMENDATIONS. CHANGES TO THE PLANS BY THE OWNER AND/OR CONTRACTOR SHALL BE THE RESPONSIBILITY OF THE PERSONS MAKING SUCH CHANGES.

1.5 THE OWNER AND CONTRACTOR SHALL HOLD HARMLESS THE ARCHITECT FROM AND AGAINST ALL CLAIMS, DAMAGES, LOSSES AND EXPENSES INCLUDING, BUT NOT LIMITED TO, ATTORNEY'S FEES ARISING OUT OF OR RESULTING FROM THE PERFORMANCE OF THE WORK BY THE CONTRACTOR. THE ARCHITECT SHALL NOT HAVE CONTROL OR CHARGE OF AND SHALL NOT BE RESPONSIBLE FOR CONSTRUCTION MEANS, METHODS, TECHNIQUES, SEQUENCES, OR PROCEDURES; OR FOR SAFETY PRECAUTIONS AND PROGRAMS IN CONNECTION WITH THE WORK; OR FOR THE ACTS OR OMISSIONS OF THE CONTRACTOR, SUBCONTRACTORS, OR ANY OTHER PERSONS PERFORMING ANY OF THE WORK; OR FOR THE FAILURE OF ANY OF THEM TO CARRY OUT THE WORK IN ACCORDANCE WITH THE CONTRACT DOCUMENTS.

1.6 EXAMINATION OF SITE, DRAWINGS, AND SPECIFICATIONS: THE CONTRACTOR SHALL CAREFULLY EXAMINE THE SITE, DRAWINGS, AND SPECIFICATIONS, FULLY ACQUAINT AND FAMILIARIZE HIMSELF WITH THE CONDITIONS AS THEY EXIST AND MAKE SUCH INVESTIGATIONS AS HE MAY SEE FIT SO THAT HE SHALL FULLY UNDERSTAND THE FACILITIES, DIFFICULTIES, AND RESTRICTIONS PERTAINING TO THE WORK. 1.7 PERMITS: THE CONTRACTOR SHALL BE RESPONSIBLE FOR OBTAINING AND PAYING FOR ALL REQUIRED PERMITS, INSPECTIONS, ETC.

1.8 ALL WORK, MATERIALS, AND EQUIPMENT SHALL MEET THE LATEST REQUIREMENTS OF ALL APPLICABLE STATE & LOCAL BUILDING CODES, REGULATIONS, THE REQUIREMENTS OF THE AUTHORITIES HAVING JURISDICTION AND THE SPECIFICATIONS OF THE NATIONAL BOARD OF UNDERWRITERS. WHERE APPLICABLE, COMPLY WITH ALL REQUIREMENTS OF THE N.J.U.C.C. BARRIER FREE SUBCODE AND/OR THE AMERICANS WITH DISABILITIES ACT (ADA).

1.9 EXCEPT WHERE SPECIFIED REQUIREMENTS ARE MORE STRINGENT, INSTALL ALL PRODUCTS IN ACCORDANCE WITH MANUFACTURER'S INSTRUCTIONS, RECOMMENDATIONS AND THE STANDARDS OF RECOGNIZED AGENCIES AND ASSOCIATIONS. PROVIDE ALL ANCHORS, FASTENERS, AND ACCESSORIES REQUIRED FOR A COMPLETE INSTALLATION. ALLOW FOR THERMAL EXPANSION/CONTRACTION AND BUILDING MOVEMENT. SEPARATE INCOMPATIBLE MATERIALS WITH SUITABLE MATERIALS OR SPACING. PREVENT CATHODIC CORROSION. PROTECT ALUMINUM SURFACES FROM CONTACT WITH MASONRY OR OTHER METALS. PROVIDE CONTROL JOINTS AT MATERIALS AND ISOLATION JOINTS BETWEEN MATERIALS/STRUCTURE AS INDICATED AND AS REQUIRED BY MANUFACTURER OR RECOGNIZED INDUSTRY STANDARDS.

1.10 INSTALL PRODUCTS UNDER APPROPRIATE ENVIRONMENTAL CONDITIONS (AIR TEMPERATURE, SURFACE TEMPERATURE, RELATIVE HUMIDITY, ETC.) TO INSURE QUALITY AND DURABILITY. MAINTAIN PROPER PROTECTION DURING DRYING/CURING.

1.11 THE CONTRACTOR SHALL, WITHOUT DELAY AND PRIOR TO FABRICATION OR INSTALLATION, BRING TO THE ATTENTION OF THE ARCHITECT, ANY DISCREPANCIES BETWEEN THE MANUFACTURER'S REQUIRED SPECIFICATIONS OR RECOMMENDATIONS, APPLICABLE CODE PROVISIONS, AND THE CONTRACT DOCUMENTS. UNAUTHORIZED CHANGES TO THE PLANS BY THE OWNER AND CONTRACTOR SHALL BE THE RESPONSIBILITY OF THE PERSONS MAKING SUCH CHANGES.

1.12 SUBSTITUTIONS: SUBMISSION OF A SUBSTITUTION REQUEST BY THE CONTRACTOR (WHERE PERMITTED IN THE CONTRACT DOCUMENTS) SHALL CONSTITUTE A REPRESENTATION BY THE CONTRACTOR THAT HE HAS INVESTIGATED THE PROPOSED PRODUCT OR CONDITION AND DETERMINED THAT IT IS EQUAL TO OR BETTER THAN THE SPECIFIED PRODUCT OR CONDITION AND DETERMINED THAT IT IS EQUAL TO OR BETTER THAN THE SPECIFIED PRODUCT OR CONDITION (INCLUDING WARRANTY COVERAGE) AND THAT HE WILL COORDINATE THE INSTALLATION AND MAKE OTHER CHANGES (INCLUDING MODIFICATION AND COORDINATION OF OTHER WORK AFFECTED BY THE CHANGE) WHICH MAY BE REQUIRED FOR THEIR WORK TO BE COMPLETE IN ALL ASPECTS.

1.13 CUTTING & PATCHING: INCLUDE ALL CUTTING AND PATCHING FOR PENETRATIONS THROUGH FLOORS, WALLS CEILINGS AND ROOFS. DO NOT CUT OR NOTCH ANY STRUCTURAL MEMBER TO REDUCE ITS LOAD CARRYING CAPACITY.

1.14 UNFORESEEN CONDITIONS: SHOULD UNFORESEEN CONDITIONS BE ENCOUNTERED THAT AFFECT DESIGN OR FUNCTION OF THE PROJECT, CONTRACTOR SHALL INVESTIGATE FULLY AND SUBMIT AN ACCURATE, DETAILED REPORT TO THE ARCHITECT WITHOUT DELAY. WHILE AWAITING A RESPONSE, CONTRACTOR SHALL RESCHEDULE OPERATIONS AS REQUIRED TO AVOID DELAY OF OVERALL PROJECT.

1.15 PROVIDE TEMPORARY FACILITIES, SERVICES UTILITIES, AND PROTECTION AS REQUIRED TO SAFELY EXECUTE ALL WORK, PROTECT ADJACENT CONSTRUCTION, AND INHABITANTS. COMPLY WITH ALL APPLICABLE REQUIREMENTS OF GOVERNING AUTHORITIES INCLUDING, BUT NOT LIMITED TO, PUBLIC UTILITIES. PROVIDE 24 HOUR NOTIFICATION OF ANY DISCONTINUITY IN UTILITY SERVICES WITH THE OWNER. CONTRACTOR SHALL BE RESPONSIBLE TO REMOVE AND LEGALLY DISPOSE OF ALL MATERIAL FROM THE JOB SITE.

No:	Date:	Revision:
01	01-24-22	DRAWING UPDATE

HERITAGE MADISON ARCHITECTURE, LLC.
Architecture Design Interiors
1171 Madison Ave., Suite 201
Paterson, N.J. 07503
Tel: (973) 689 8780
Fax: (862) 239 1888
admin@hmallc.net www.hmallc.net

Project No: 2173
Date: Oct. 4, 2021
Block: 1901
Lot: 10

Project:
PROPOSED
SINGLE FAMILY DWELLING
109 East Orchard Street
Allendale, New Jersey
Client:

Scale: AS NOTED
Drawn By: --
Checked By: --

Drawing title:
Title, Location Map, Area & Volume Calculations, Elevations, Notes

Seal:
Nassir Almukhtar, RA
NJ Lic. # 16036
NY Lic. # 030342

Drawing No: T-01

© Heritage Madison Architecture, LLC

F:\Dwg\0-2021-JOBS\2173-Allendale-109 E Orchard St-Shoaeb\CD\Plot\T-01.dwg, 2/24/2022 10:26:30 AM, DWG To PDF.pc3

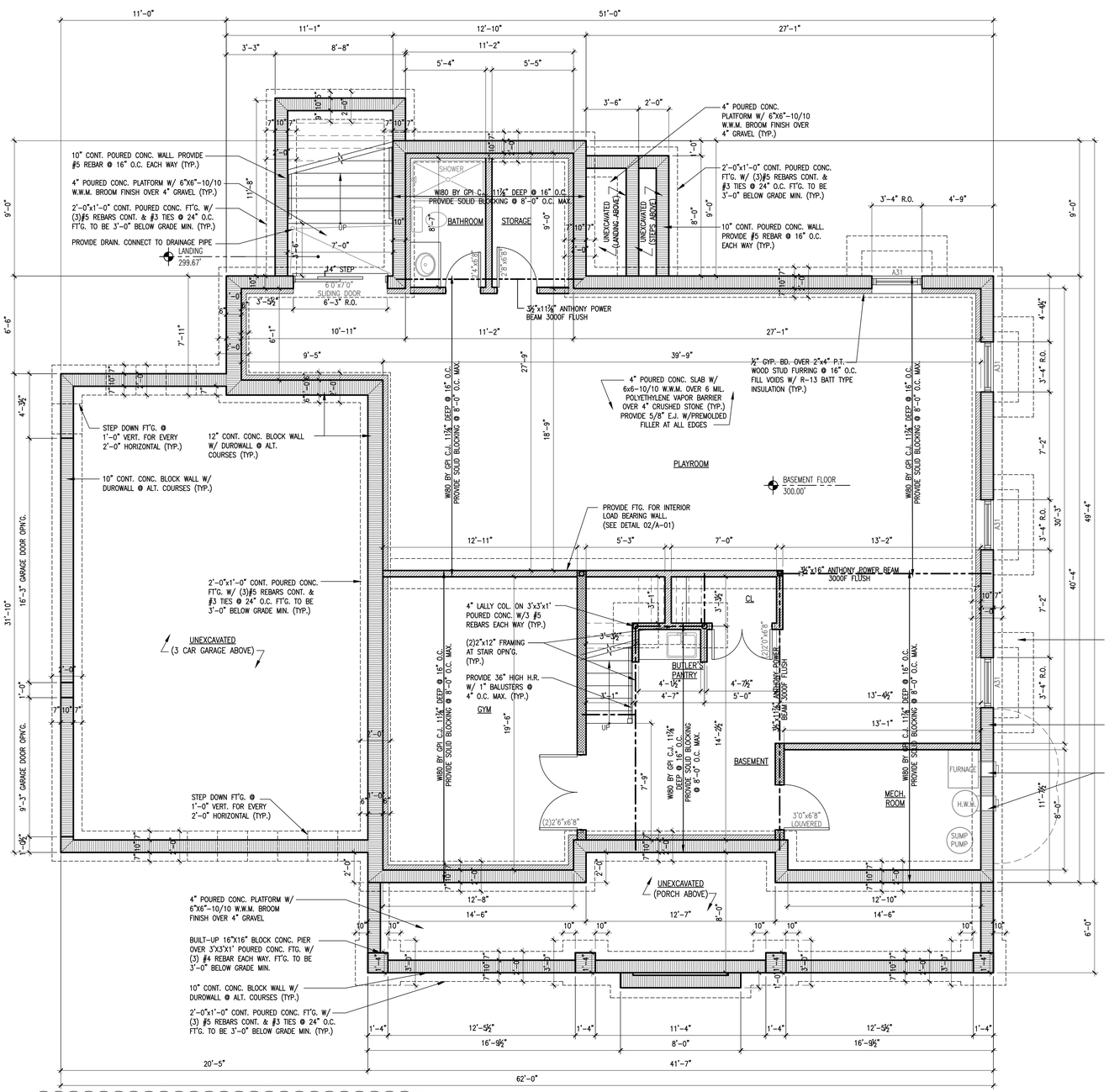

01 BASEMENT FLOOR PLAN (CONSTRUCTION)

SCALE: 1/4" = 1'-0"

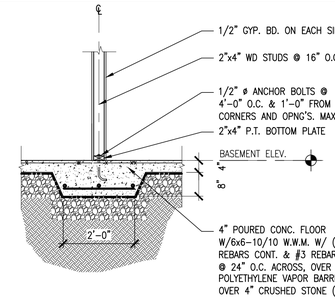

02 INTERIOR LOAD BERING WALL DETAIL

SCALE: 1/2" = 1'-0"

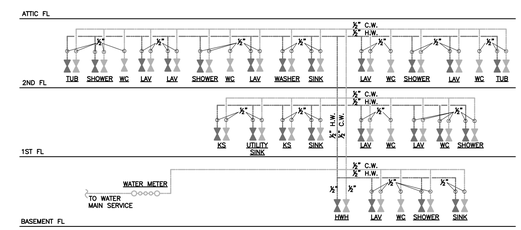

03 WATER SUPPLY DIAGRAM

SCALE: N.T.S.

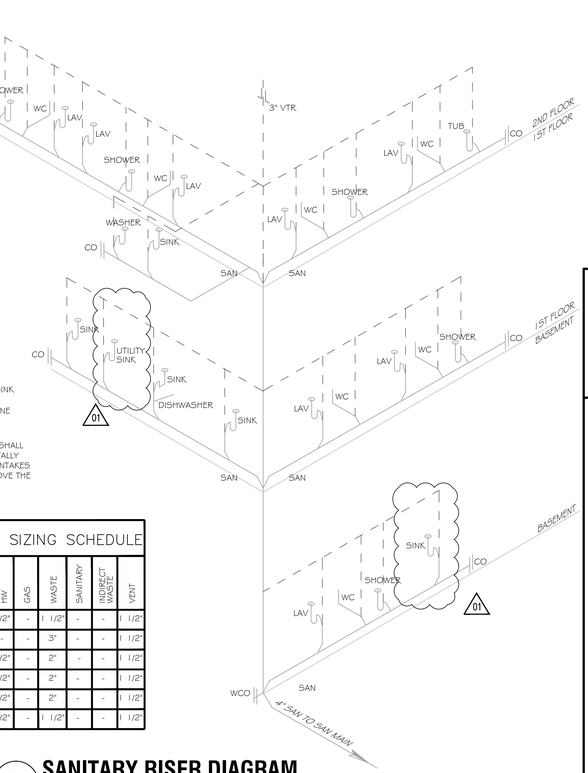

04 SANITARY RISER DIAGRAM

SCALE: N.T.S.

PLUMBING LEGEND

WC	WATER CLOSET
HWH	WATER HEATER
HW	HOT WATER
CW	COLD WATER
WW	WARM WATER
FW	FILTERED WATER
MS	MOP SINK
HS	HAND SINK
FS	FLOOR SINK
FD	FLOOR DRAIN
WWM	WARM WATER MIXER
CO	CLEAN OUT
LAV	LAVATORY
V	VENT
VTR	VENT THROUGH ROOF
WV	WASTE WATER
WF	WATER FILTER
3CS	THREE COMPARTMENT SINK
BFP	BACKFLOW PREVENTER
RPZ	REDUCED PRESSURE ZONE
SAN	SANITARY LINE

NOTE: ALL PLUMBING VENT TERMINATIONS ABOVE THE ROOF SHALL NOT BE WITHIN 10 FEET HORIZONTALLY OF ANY FRESH / VENTILATION AIR INTAKES UNLESS IT IS AT LEAST 2 FEET ABOVE THE TOP OF SUCH OPENING.

PLUMBING FIXTURE SIZING SCHEDULE

NO	EQUIPMENT	CW	HW	GAS	WASTE	SANITARY	INDIRECT WASTE	VENT
1	LAVATORY	1/2"	1/2"	-	1 1/2"	-	-	1 1/2"
2	WATER CLOSET	1/2"	-	-	3"	-	-	1 1/2"
3	TUB	1/2"	1/2"	-	2"	-	-	1 1/2"
4	SHOWER	1/2"	1/2"	-	2"	-	-	1 1/2"
5	SINK	1/2"	1/2"	-	2"	-	-	1 1/2"
6	WASHER	1/2"	1/2"	-	1 1/2"	-	-	1 1/2"

CONSTRUCTION LEGEND

- NEW WALL CONSTRUCTION 2"x4" WOOD STUDS @ 16" O.C. U.O.N.
- NEW WALL CONSTRUCTION 2"x6" WOOD STUDS @ 16" O.C. U.O.N.
- NEW CONCRETE BLOCK WALL CONSTRUCTION (01)

NOTES:

- PROVIDE R-13 BATT. INSULATION @ ALL EXTERIOR WALLS & 1/2" GYP. BD. @ WALLS & CLG. (TYP. THRU-OUT)
- ALL WINDOWS BY ANDERSEN U.O.N.
- ALL DOORS AND WINDOWS TO HAVE (2)2"X12" HEADERS
- DIMENSIONS ARE TO WALL FINISH
- CONTRACTOR TO VERIFY ALL DIMENSIONS IN FIELD
- ALL STAIRS TO HAVE MAX. RISER 8¾" MIN. TREAD 9"
- PROVIDE 36" HIGH H.R. W/ 1" BALUSTERS @ 4" O.C. MAX. @ ALL STAIRS LOCATIONS MORE THAN THREE RISERS AND OPENINGS HIGHER THAN 30"
- PROVIDE 1½"ø HANGING ROD W/ SHELF PAINTED @ 5'-6" A.F.F. IN ALL BEDROOM CLOSETS
- FLOOR FINISHED TO BE SELECTED BY OWNER
- ALL BATHROOMS FINISHES & FIXTURES TO BE SELECTED BY OWNER
- C.T. IN BATHROOMS TO BE DETERMINED
- W.P. GYP. BD. IN BATHROOMS
- CEMENT BOARD BACKING @ SHOWER & TUB ENCL. (TYP.)

NOTES:

- VERIFY ELEVATION OF EXST'G. SANITARY SEWER TO BE SUFFICIENT TO PROVIDE GRAVITY DRIVEN SEWAGE. PROVIDE SEWER EJECTOR PUMP IF REQUIRED.

No:	Date:	Revision:
01	01-24-22	DRAWING UPDATE

HERITAGE MADISON ARCHITECTURE, LLC.
Architecture Design Interiors
1171 Madison Ave., Suite 201
Paterson, N.J. 07503
Tel: (973) 689 8780
Fax: (862) 239 1888
admin@hmallc.net www.hmallc.net

Project No: 2173
Date: Oct. 4, 2021
Block: 1901
Lot: 10
Scale: AS NOTED
Drawn By: --
Checked By: --

Project: PROPOSED
SINGLE FAMILY DWELLING
109 East Orchard Street
Allendale, New Jersey
Client:

Drawing title: Basement Floor Plan (Construction) Load Bearing Wall Dtl, Water Supply Diag., Legend & Notes

Seal: Nassir Almukhtar, RA
NJ Lic. # 16036
NY Lic. # 030342

Drawing No: A-01

© Heritage Madison Architecture, LLC

F:\Dwg\0-2021-JOBS\2173-Allendale-109 E Orchard St-Shoaeb\CD\Plot\A-01.dwg, 2/24/2022 10:26:36 AM, DWG To PDF.pc3

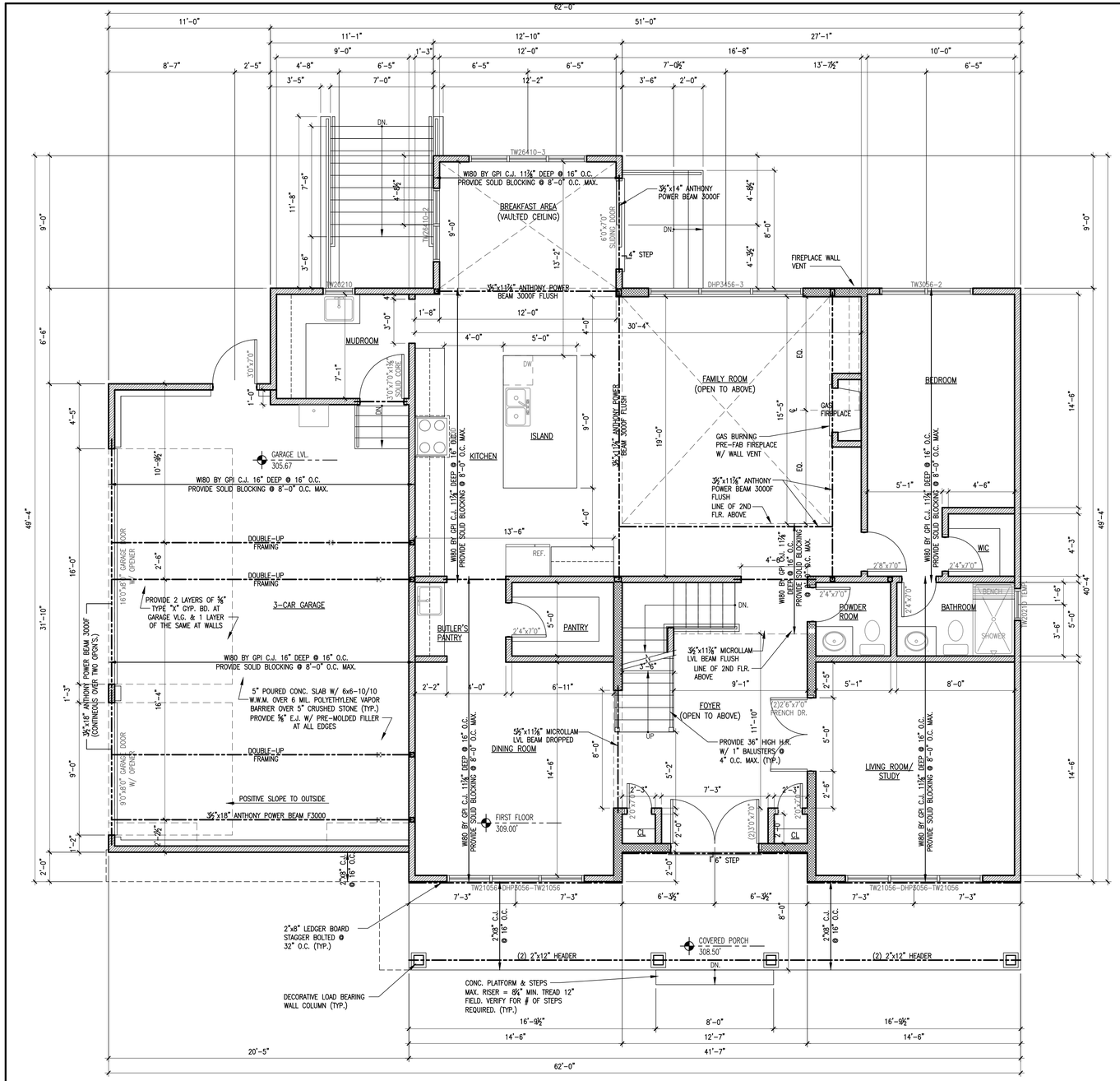

01 FIRST FLOOR PLAN (CONSTRUCTION)

SCALE: 1/4" = 1'-0"

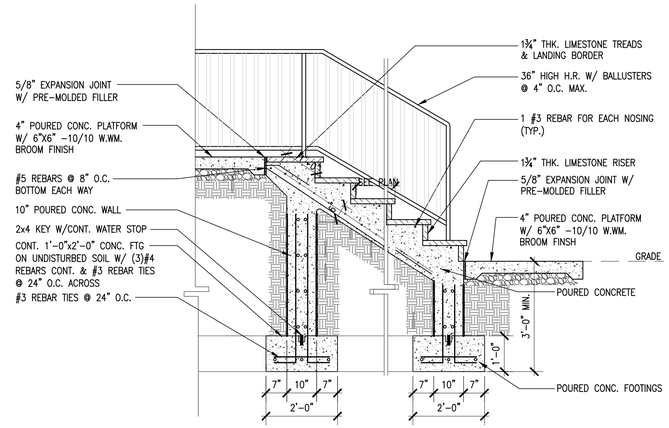

02 CONCRETE STAIR DETAIL

SCALE: 1/2" = 1'-0"

CONSTRUCTION LEGEND

- NEW WALL CONSTRUCTION 2"x4" WOOD STUDS @ 16" O.C. U.O.N.
- NEW WALL CONSTRUCTION 2"x6" WOOD STUDS @ 16" O.C. U.O.N.
- NEW CONCRETE BLOCK WALL CONSTRUCTION

ELECTRICAL LEGEND

SYMBOL	DESCRIPTION
	INTERIOR GRADE SURFACE MTD. LIGHT FIXTURE
S	SINGLE POLE LIGHT SWITCH
S3	THREE WAY LIGHT SWITCH
S4	FOUR WAY LIGHT SWITCH
	DUPLEX RECEPTACLE OUTLET
GFI	DUPLEX RECEPTACLE OUTLET GROUND FAULT INTERRUPT
WP	WEATHER PRROF DUPLEX RECEPTACLE OUTLET
JB	JUNCTION BOX
SC	SMOKE/CARBON MONOXIDE DETECTOR HARD WIRED W/BATTERY PACK
S	SMOKE HARD WIRED W/BATTERY PACK
	EXHAUST FAN/LIGHT FIXTURE COMB.
	CHANDELIER
	LIGHT/ CLG. FAN
	WALL MOUNTED LIGHT FIXTURE
	1'x4' FLOURECENT STRIP LIGHT FIXTURE
	PENDANT LIGHT FIXTURE
	LIGHT FIXTURE/GARAGE DOOR OPENER COMB.
MS	EXTERIOR LIGHT FIXTURE W/MOTION SENSOR

NOTES:

- PROVIDE R-13 BATT. INSULATION @ ALL EXTERIOR WALLS & 1/2" GYP. BD. @ WALLS & CLG. (TYP. THRU-OUT)
- ALL WINDOWS BY ANDERSEN U.O.N.
- ALL DOORS AND WINDOWS TO HAVE (2)2"X12" HEADERS
- DIMENSIONS ARE TO WALL FINISH
- CONTRACTOR TO VERIFY ALL DIMENSIONS IN FIELD
- ALL STAIRS TO HAVE MAX. RISER 8¼" MIN. TREAD 9"
- PROVIDE 36" HIGH H.R. W/ 1" BALUSTERS @ 4" O.C. MAX. @ ALL STAIRS LOCATIONS MORE THAN THREE RISERS AND OPENINGS HIGHER THAN 30"
- PROVIDE 1½"ø HANGING ROD W/ SHELF PAINTED @ 5'-6" A.F.F. IN ALL BEDROOM CLOSETS
- FLOOR FINISHED TO BE SELECTED BY OWNER
- ALL BATHROOMS FINISHES & FIXTURES TO BE SELECTED BY OWNER
- C.T. IN BATHROOMS TO BE DETERMINED
- W.P. GYP. BD. IN BATHROOMS
- CEMENT BOARD BACKING @ SHOWER & TUB ENCL. (TYP.)

NOTES:

- VERIFY ELEVATION OF EXST'G. SANITARY SEWER TO BE SUFFICIENT TO PROVIDE GRAVITY DRIVEN SEWAGE. PROVIDE SEWER EJECTOR PUMP IF REQUIRED.

No:	Date:	Revision:
01	01-24-22	DRAWING UPDATE

HERITAGE MADISON ARCHITECTURE, LLC.
Architecture Design Interiors
1171 Madison Ave., Suite 201
Paterson, N.J. 07503
Tel: (973) 689 8780
Fax: (862) 239 1888
admin@hmallc.net www.hmallc.net

Project No: 2173
Date: Oct. 4, 2021
Block: 1901
Lot: 10
Scale: AS NOTED
Drawn By: --
Checked By: --

Project:
PROPOSED
SINGLE FAMILY DWELLING
109 East Orchard Street
Allendale, New Jersey
Client:

Drawing title:
First Floor Plan (Construction), Concrete Stair Detail, Legend & Notes

Seal:
Nassir Almukhtar, RA
NJ Lic. # 16036
NY Lic. # 030342

Drawing No: A-02

© Heritage Madison Architecture, LLC

F:\Dwg\0-2021-JOBS\2173-Allendale-109 E Orchard St-Shoaeb\CD\Plot\A-02.dwg, 2/24/2022 10:26:43 AM, DWG To PDF.pc3

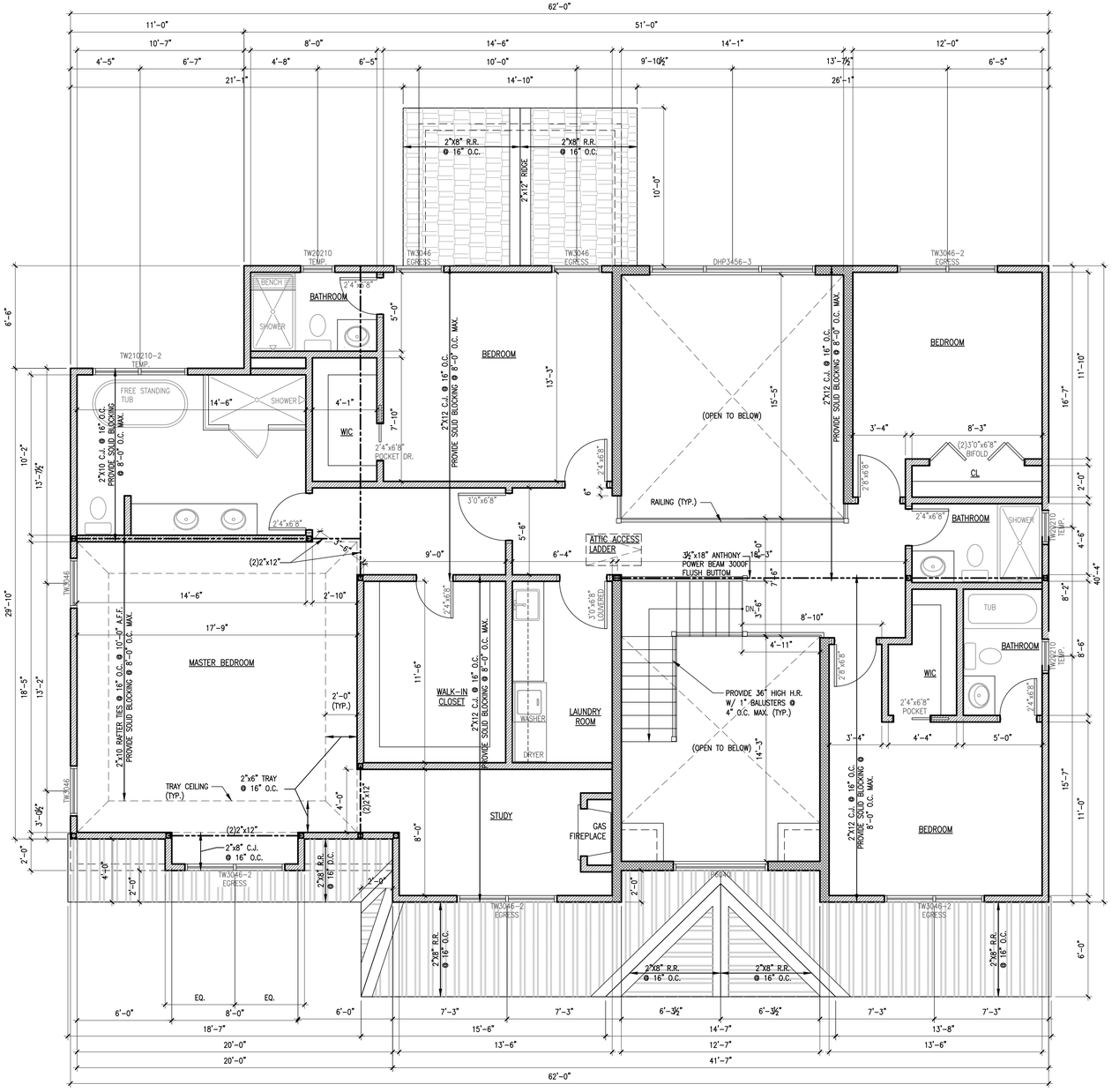

01 SECOND FLOOR PLAN (CONSTRUCTION)

SCALE: 1/4" = 1'-0"

CONSTRUCTION LEGEND

- NEW WALL CONSTRUCTION 2"x4" WOOD STUDS @ 16" O.C. U.O.N.
- NEW WALL CONSTRUCTION 2"x6" WOOD STUDS @ 16" O.C. U.O.N.
- NEW CONCRETE BLOCK WALL CONSTRUCTION

ELECTRICAL LEGEND

SYMBOL	DESCRIPTION
	INTERIOR GRADE SURFACE MTD. LIGHT FIXTURE
S	SINGLE POLE LIGHT SWITCH
S3	THREE WAY LIGHT SWITCH
S4	FOUR WAY LIGHT SWITCH
	DUPLEX RECEPTACLE OUTLET
GFI	DUPLEX RECEPTACLE OUTLET GROUND FAULT INTERRUPT
WP	WEATHER PRROF DUPLEX RECEPTACLE OUTLET
JB	JUNCTION BOX
SC	SMOKE/CARBON MONOXIDE DETECTOR HARD WIRED W/BATTERY PACK
S	SMOKE HARD WIRED W/BATTERY PACK
	EXHAUST FAN/LIGHT FIXTURE COMB.
	CHANDELIER
	LIGHT/ CLG. FAN
	WALL MOUNTED LIGHT FIXTURE
	1'x4' FLOURECENT STRIP LIGHT FIXTURE
	PENDANT LIGHT FIXTURE
	LIGHT FIXTURE/GARAGE DOOR OPENER COMB.
MS	EXTERIOR LIGHT FIXTURE W/MOTION SENSOR

NOTES:

- PROVIDE R-13 BATT. INSULATION @ ALL EXTERIOR WALLS & 1/2" GYP. BD. @ WALLS & CLG. (TYP. THRU-OUT)
- ALL WINDOWS BY ANDERSEN U.O.N.
- ALL DOORS AND WINDOWS TO HAVE (2)2"X12" HEADERS
- DIMENSIONS ARE TO WALL FINISH
- CONTRACTOR TO VERIFY ALL DIMENSIONS IN FIELD
- ALL STAIRS TO HAVE MAX. RISER 8¼" MIN. TREAD 9"
- PROVIDE 36" HIGH H.R. W/ 1" BALUSTERS @ 4" O.C. MAX. @ ALL STAIRS LOCATIONS MORE THAN THREE RISERS AND OPENINGS HIGHER THAN 30"
- PROVIDE 1½"Ø HANGING ROD W/ SHELF PAINTED @ 5'-6" A.F.F. IN ALL BEDROOM CLOSETS
- FLOOR FINISHED TO BE SELECTED BY OWNER
- ALL BATHROOMS FINISHES & FIXTURES TO BE SELECTED BY OWNER
- C.T. IN BATHROOMS TO BE DETERMINED
- W.P. GYP. BD. IN BATHROOMS
- CEMENT BOARD BACKING @ SHOWER & TUB ENCL. (TYP.)

NOTES:

- VERIFY ELEVATION OF EXST'G. SANITARY SEWER TO BE SUFFICIENT TO PROVIDE GRAVITY DRIVEN SEWAGE. PROVIDE SEWER EJECTOR PUMP IF REQUIRED.

No:	Date:	Revision:
01	01-24-22	DRAWING UPDATE

HERITAGE MADISON ARCHITECTURE, LLC.
Architecture Design Interiors
1171 Madison Ave., Suite 201
Paterson, N.J. 07503
Tel: (973) 689 8780
Fax: (862) 239 1888
admin@hmallc.net www.hmallc.net

Project No: 2173
Date: Oct. 4, 2021
Block: 1901
Lot: 10
Scale: AS NOTED
Drawn By: --
Checked By: --

Project: PROPOSED
SINGLE FAMILY DWELLING
109 East Orchard Street
Allendale, New Jersey
Client:

Drawing title: Second Floor Plan (Construction) Legend, Notes

Seal: Nassir Almukhtar, RA
NJ Lic. # 16036
NY Lic. # 030342

Drawing No: A-03

© Heritage Madison Architecture, LLC

F:\Dwg\0-2021-JOBS\2173-Allendale-109 E Orchard St-Shoaeb\CD\Plot\A-03.dwg, 2/24/2022 10:26:49 AM, DWG To PDF.pc3

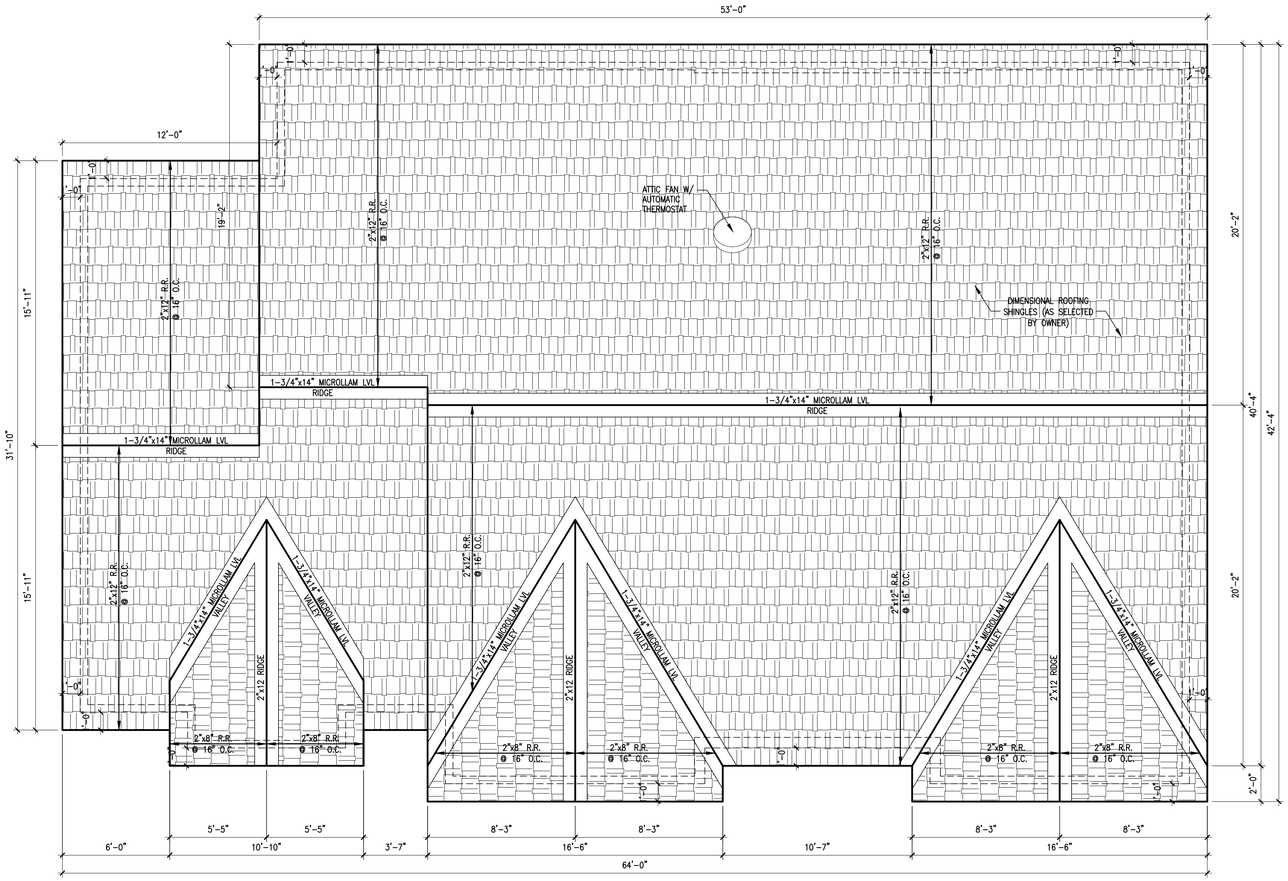

01 ROOF PLAN
SCALE: 1/4" = 1'-0"

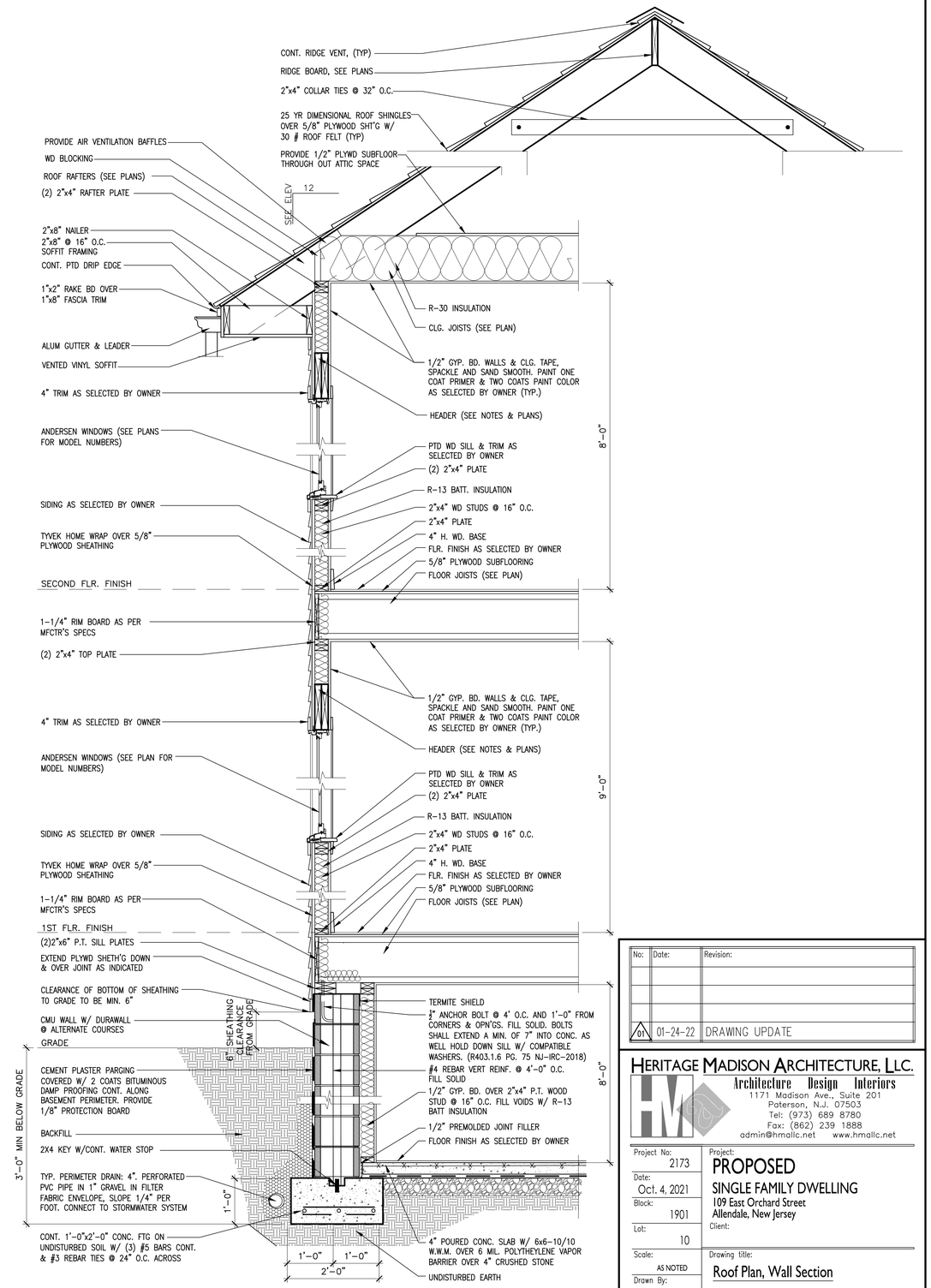

02 WALL SECTION
SCALE: 3/4" = 1'-0"

No:	Date:	Revision:
01	01-24-22	DRAWING UPDATE

HERITAGE MADISON ARCHITECTURE, LLC.
Architecture Design Interiors
1171 Madison Ave., Suite 201
Paterson, N.J. 07503
Tel: (973) 689 8780
Fax: (862) 239 1888
admin@hmallc.net www.hmallc.net

Project No: 2173
Date: Oct. 4, 2021
Block: 1901
Lot: 10
Scale: AS NOTED
Drawn By: --
Checked By: --

Project: PROPOSED
SINGLE FAMILY DWELLING
109 East Orchard Street
Allendale, New Jersey
Client:

Drawing title: Roof Plan, Wall Section

Seal: Nassir Almukhtar, RA
NJ Lic. # 16036
NY Lic. # 030342

Drawing No: A-04

© Heritage Madison Architecture, LLC

F:\Dwg\0-2021-JOBS\2173-Allendale-109 E Orchard St-Shoaeb\CD\Plot\A-04.dwg, 2/24/2022 10:26:53 AM, DWG To PDF.pc3

Storage and Handling

- Wood I Beam™ joists and FiberStrong® rim board shall not be stored in direct contact with the ground and should be protected from weather. Provide air circulation under covering and around stacks of materials.
- Bundles should be stored level.
- Do not open bundles until time of installation. Use care when handling bundles and individual components to prevent injury to handlers or damage by forklifts or cranes.
- Stack and handle Wood I Beam joists in the upright position. Stack and handle FiberStrong rim board flatwise.
- Twisting of joists, or applying loads to the joist when flat can damage the joist.
- Damaged products should not be used.

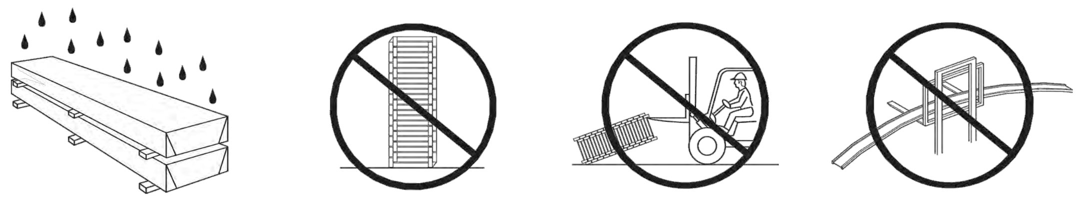

Protect products from sun and water. Use support blocks at 10′ on-center to keep bundles out of water.

DO NOT store Wood I Beam joists flat.

DO NOT lift Wood I Beam joists by top flange.

DO NOT lift Wood I Beam joists in the flat orientation.

Safety Warning

Handlers and installers should use appropriate personal protective equipment such as gloves and goggles.

Wood I Beam joists will not support workers or other loads until properly installed and braced. To minimize risk of injury, each Wood I Beam joist shall be properly fastened as it is erected. Continuous closure and/or blocking panels must be installed and attached prior to installing floor or roof sheathing. Lateral restraint, such as an existing deck or braced end wall, must be established at the ends of the bay. Alternatively, a temporary or permanent deck (sheathing) may be nailed to the first 4 feet of joists at the end of the bay.

Rows of temporary bracing at right angles to joists must be fastened with a minimum of two 8d nails (10d box nails if net thickness of bracing exceeds 1″) to the upper surface of each parallel joist and the established lateral restraint. Bracing should be 1x4 minimum and at least 8′ long with on-center spacing not to exceed 10′. Ends of adjoining bracing should lap over at least two joists. Stack building materials over main beams or walls only.

The following can result in serious accidents: improper storage or installation, failure to follow applicable building codes, failure to follow proper load tables, failure to use acceptable hole sizes and locations, or failure to use bearing stiffeners when required. Installation notes must be followed carefully.

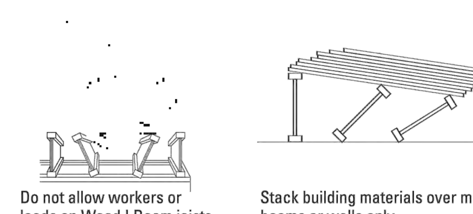

Do not allow workers or loads on Wood I Beam joists until properly installed and braced as outlined above.

Stack building materials over main beams or walls only.

Installation Notes

A. Engineered lumber must not be installed in direct contact with concrete or masonry construction and shall be used in covered, dry use conditions only, where the in-service moisture content does not exceed 16%.

B. Except for cutting to length and birdsmouth cuts, top and bottom flanges of Wood I Beam™ joists shall not be cut, drilled or notched.

C. Concentrated loads shall only be applied to the upper surface of the top flange, not suspended from the bottom flange. Contact BlueLinx for exceptions.

D. When nailing sheathing to top flange, follow sheathing manufacturer's nailing recommendations, but maintain spacing in the ranges shown below:

Sheathing Nail Spacing Requirements

Nail Size	GPI 20		GPI 40, GPI 65		WI 40, WI 60, WI 80	
	Min.	Max.	Min.	Max.	Min.	Max.
8d Box, 8d Common	3″	16″	2″	24″	4″	24″
10d Box, 12d Box	3″	16″	2″	24″	4″	24″
10d Common, 12d Common	4½″	16″	3″	24″	4″	24″

NOTES:

1. If more than one row of nails is required, rows must be offset by at least ½″ (¾″ for WI joists) and staggered.
2. 14 gauge staples may be substituted for 8d nails if staples penetrate the joist flange at least 1″.
3. Do not use nails larger than those shown above when attaching sheathing to flanges of Wood I Beam joists.

Example: When using 8d common nails and GPI 20 series joists, space no closer (min.) than 3″ o.c. and no farther (max.) than 16″ o.c.

E. End bearing length must be at least 1¾″. Intermediate bearings of multiple span joists shall be at least 3½″.

F. Wood I Beam joists must be supported on walls, beams, or in hangers. They may not be supported by a non-structural ridge board or by toenailing into a beam.

G. Wood I Beam joists must be restrained against rotation at the ends of joists by use of rim joists, blocking panels, or cross bridging. The top flange of a Wood I Beam joist must be laterally supported and kept straight within ½″ of true alignment. Plytanium™ Plywood or OSB subfloor nailed to the top flange (per Note D) is adequate to provide lateral support.

H. When nail type is not specified in this guide, use common, box or sinker.

I. To help safeguard the structural integrity of connections with preservative treated wood, use only hot-dipped galvanized or stainless steel fasteners, connectors and hardware.

As a minimum requirement, hot-dipped galvanized coated fasteners should conform to ASTM Standard A153 and hot-dipped galvanized coated connectors should conform to ASTM Standard A653 (Class G-185). In demanding applications, or in highly corrosive environments, stainless steel fasteners and connectors should be utilized and may, in fact, be required by building codes. **Most commonly available electroplated galvanized fasteners do not have a sufficient coating of zinc and are not recommended. Aluminum should not be used in direct contact with preservative treated wood. Never mix galvanized steel with stainless steel in the same connection.**

J. Certain applications of staple-up radiant heating may cause additional deflection in I-joists with solid-sawn flanges due to unequal drying within the floor cavity. Contact BlueLinx for additional information.

K. GP Wood I Beam joists are manufactured without camber or specific vertical orientation. They may be installed with the identifying stamps on the side faces reading right side up or upside down.

Installation Don'ts

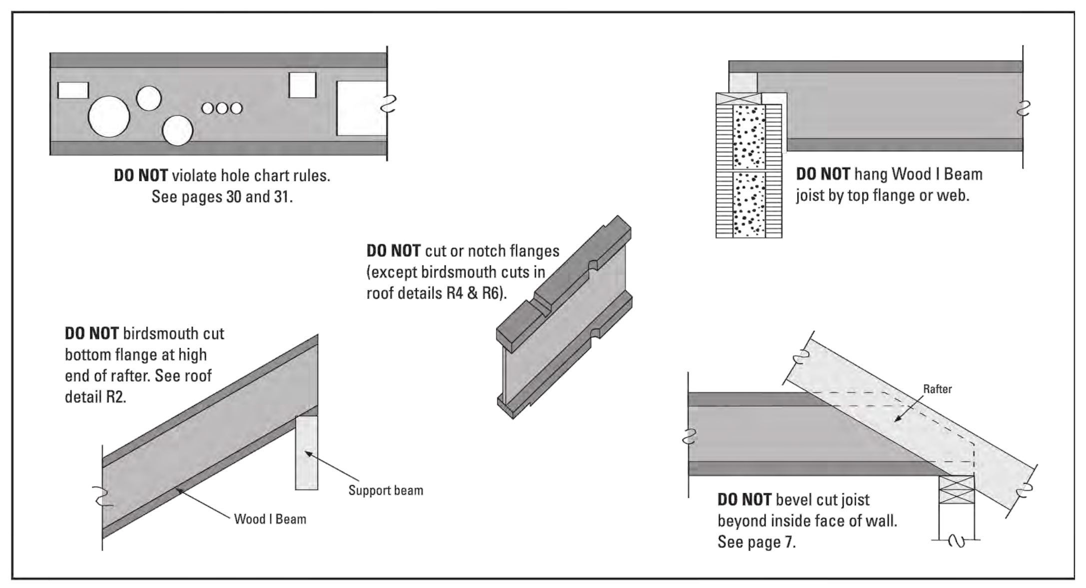

Typical Framing

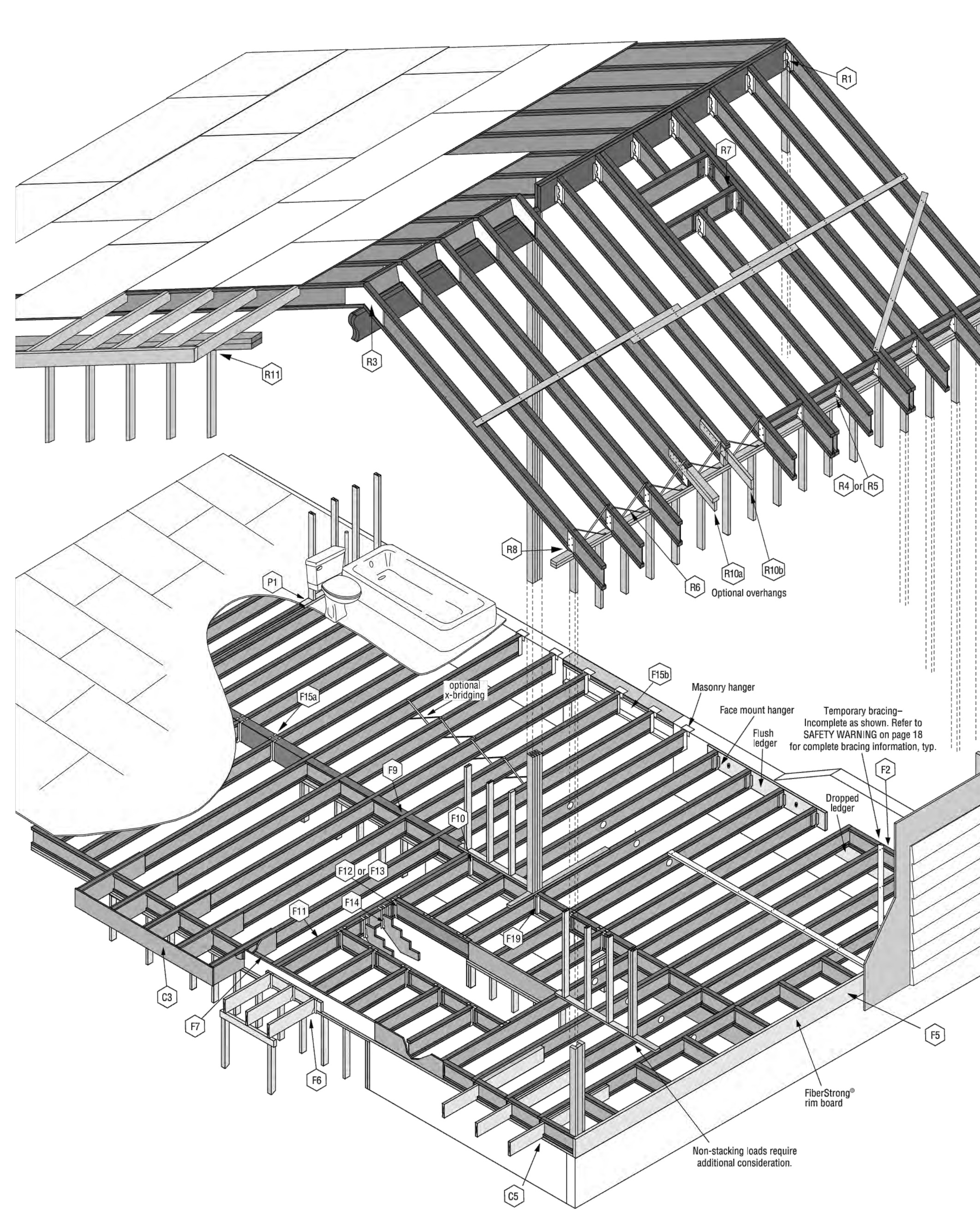

Fire Rated Assemblies for Wood I Beam™ Joists

For alternate assemblies, including a two-hour rated system, contact BlueLinx.

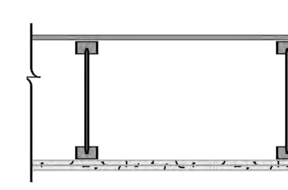

One-Hour Fire-Resistive Floor-Ceiling Assembly
(Applicable to all Wood I Beam joists)
Floor—²³⁄₃₂″ APA Rated Sturd-I-Floor® T&G wood structural panel, face grain perpendicular to joists, glued-nailed to joists with ¼″ bead of exterior construction adhesive and 8d common nails spaced per code requirements. Maximum joist spacing 24″ o.c.
Ceiling—Two layers ⅝″ Type X gypsum wallboard applied with long dimension perpendicular to joists—base layer attached to bottom flange of joists with 1¼″ Type S drywall screws, 24″ o.c., face layer attached to joists through base layer with 1⅞″ Type S drywall screws 12″ o.c. at joints and intermediate joists and 1½″ Type G drywall screws 12″ o.c. placed 2″ back on either side of end joints. Joints offset 24″ from base layer end and edge joints.

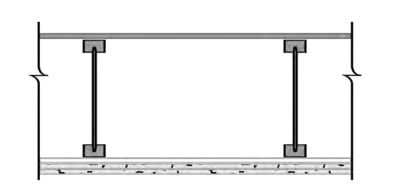

One-Hour Fire-Resistive Floor-Ceiling Assembly
(Applicable to WI series joists only)
Floor—²³⁄₃₂″ APA Rated Sturd-I-Floor T&G wood structural panel, face grain perpendicular to joists, glued-nailed to joists with ¼″ bead of construction adhesive and 8d common nails spaced per code requirements. T&G joints glued with ¼″ bead of construction adhesive. Maximum joist spacing 24″ o.c.; minimum bearing on supports 2″.
Furring—25 gauge steel resilient or hat channels, perpendicular to I-joists in continuous rows spaced up to 16″ o.c. (up to 24″ oc if joist spacing does not exceed 16″ o.c.), attached to bottom flange of each I-joist with one 1⅜″ Type S (resilient channel) or two 1″ Type S drywall screws (hat channel). Center channel splices under I-joists and overlap a minimum of 2¼″. Install additional channels midway between adjacent continuous channels, at locations of end joints in base layer. Ends of these channels must extend a minimum of 6″ beyond the edge joints of adjoining gypsum wallboard panels.
Ceiling—Two layers ⅝″ Type X gypsum applied with long dimension perpendicular to channels—base layer attached to channels with 1⅛″ Type S drywall screws 24″ o.c. face layer attached to channels through base layer with 1⅞″ Type S drywall screws 12″ o.c. joints offset at least 24″ from base layer end and edge joints, end joints centered on channels. At end joints, also attach face layer to base layer with 1½″ type G screws 12″ o.c. spaced 2″ from joint.

Plumbing Details

P1 JOIST SPACING BELOW PLUMBING WALL
Parallel to wall

Joist Spacing

Joist	2x4 Wall	2x6 Wall
GPI 20	5¼″	7¼″
40, 60 and 65 Series	6″	8″
WI 80	7″	9″

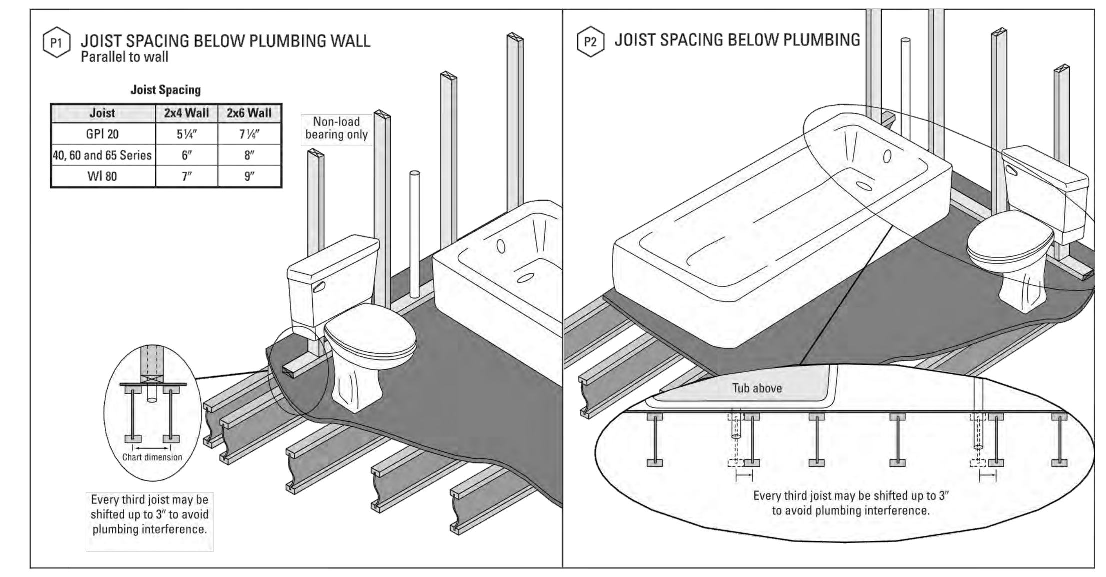

Floor Details

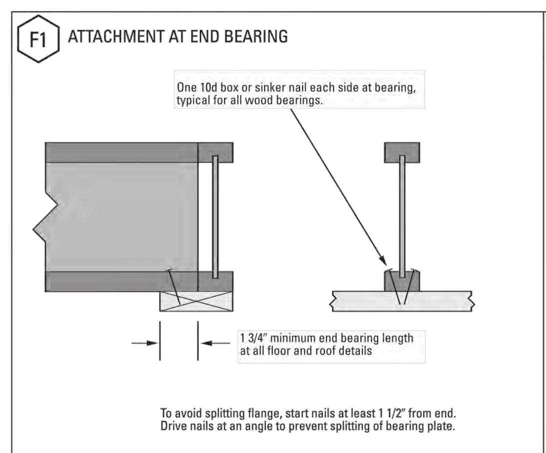

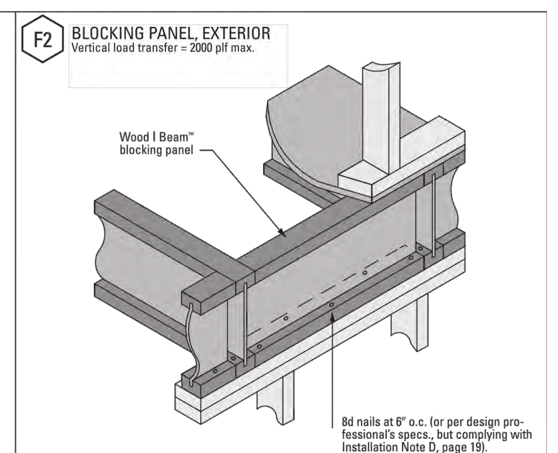

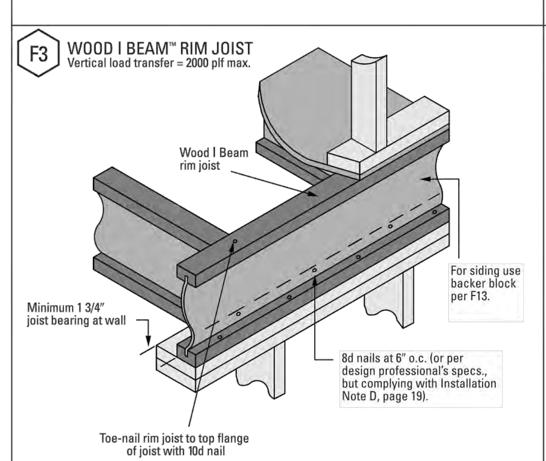

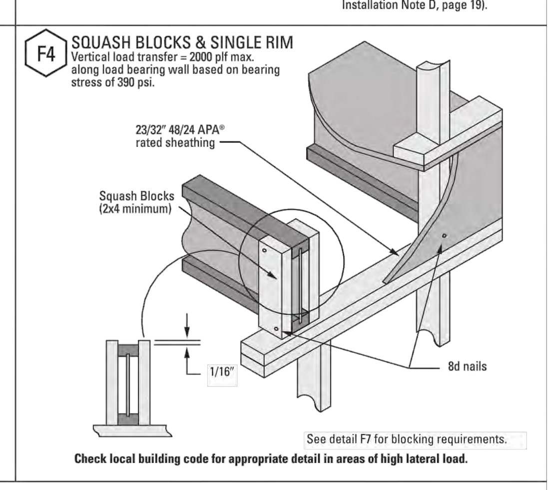

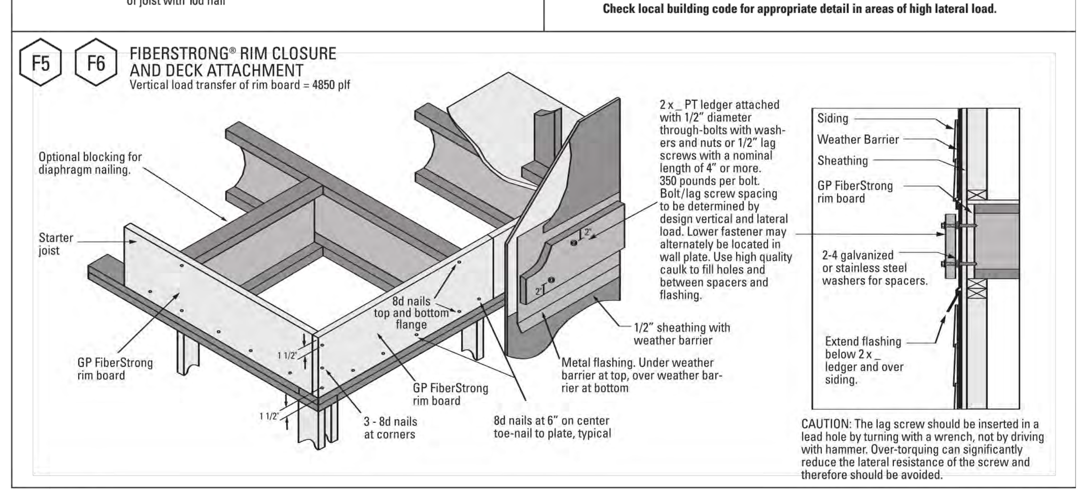

Floor Details

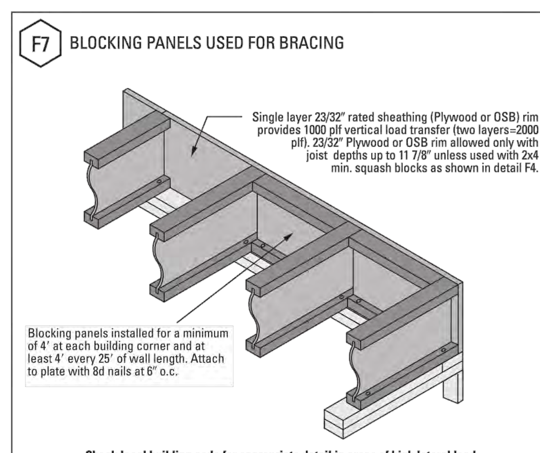

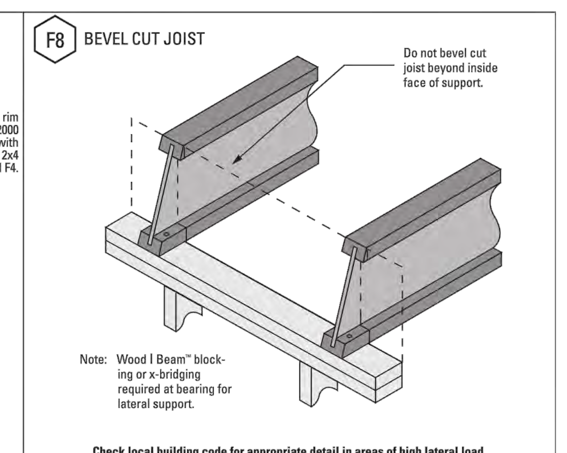

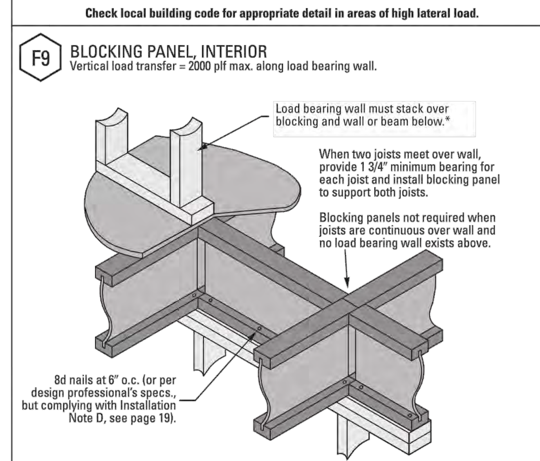

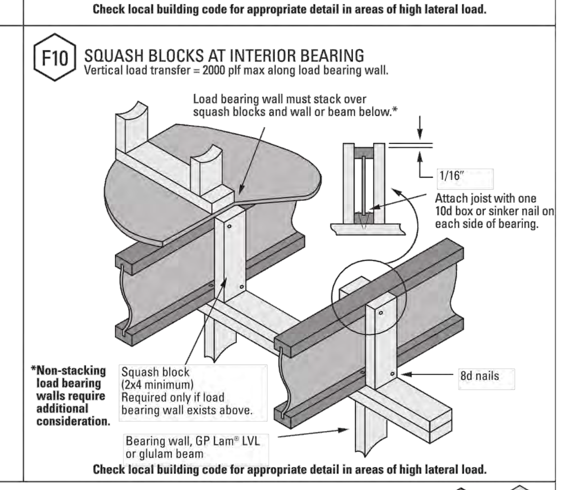

F11 DOUBLE JOIST CONSTRUCTION
Double GP Wood I Beam joists are not required to be attached together when all load is evenly distributed from above to both joists, such as when a parallel bearing wall is directly centered over the double joist.

Joist	Joist Depth	Regular Filler Blocking Use in details F12, C4 & R7	Full-depth Filler Blocking Use in details F13 & F14
GPI 20	11⅞″	2x6	2x8
GPI 40	9½″	2x6 + ⅜″ OSB/Plywood	2x6 + ⅜″ OSB/Plywood
	11⅞″	2x6 + ⅜″ OSB/Plywood	2x8 + ⅜″ OSB/Plywood
	14″	2x8 + ⅜″ OSB/Plywood	2x10 + ⅜″ OSB/Plywood
GPI 65 WI 40 WI 60	9½″	2x6 + ⅝″ OSB/Plywood	2x6 + ⅝″ OSB/Plywood
	11⅞″	2x6 + ⅝″ OSB/Plywood	2x8 + ⅝″ OSB/Plywood
	14″	2x8 + ⅝″ OSB/Plywood	2x10 + ⅝″ OSB/Plywood
	16″	2x8 + ⅝″ OSB/Plywood	2x12 + ⅝″ OSB/Plywood
WI 80	11⅞″	(2) 2x8	(2) 2x8
	14″	(2) 2x8	(2) 2x10
	16″	(2) 2x8	(2) 2x12

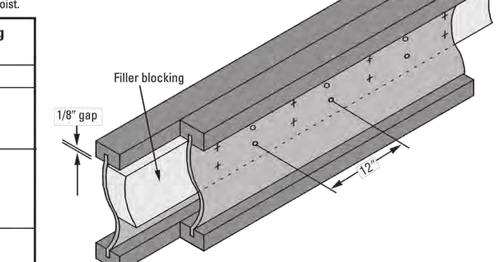

1. Support back of web during nailing to prevent damage to web-flange connection.
2. Leave ⅛″ gap between top of filler blocking and bottom of top flange.
3. Block solid between joists. Filler need not be one continuous length, but must extend the entire length of span.
4. Place joists together and nail from each side with 2 rows of 10d nails at 12″ o.c., clinched when possible. Stagger rows from opposite sides by 6″.

Floor Details

F12 FLOOR OPENING, TOP MOUNT HANGERS

Backer Blocks*

Joist	Joist Depth	Material	Depth
GPI 20	11⅞″	²³⁄₃₂″	5½″
GPI 40	9½″, 11⅞″	⅞″	6″
	14″	⅞″	7¼″
GPI 65, WI 40, WI 60	9½″, 11⅞″	½″ + ½″	6″
	14″, 16″	½″ + ½″	7¼″
WI 80	11⅞″, 14″, 16″	2x8	7¼″

*Block must be long enough to permit required nailing without splitting.

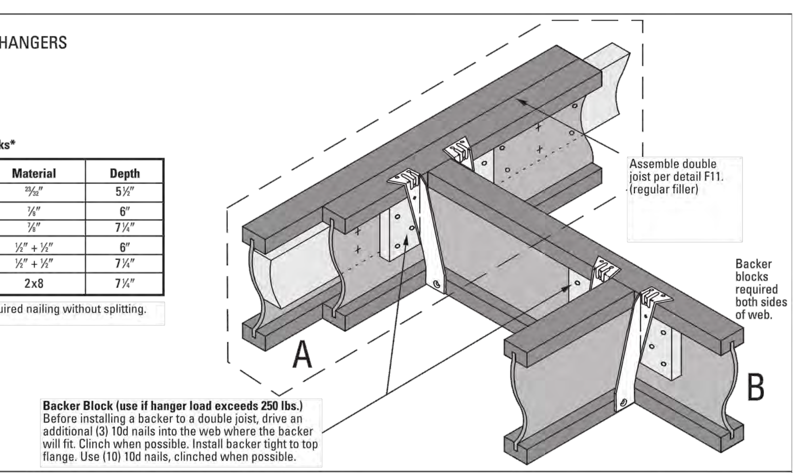

F13 FLOOR OPENING, FACE MOUNT HANGERS

Backer Blocks*

Joist	Joist Depth	Material	Depth
GPI 20	11⅞″	²³⁄₃₂″	8⅜″
GPI 40	9½″, 11⅞″, 14″	⅞″	6¼″, 8¾″, 10¾″
GPI 65, WI 40, WI 60	9½″, 11⅞″, 14″, 16″	½″ + ½″	6¼″, 8¾″, 10¾″,12¾″
WI 80	11⅞″, 14″, 16″	1½″ net	8¾″, 10¾″, 12¾″

*Block must be long enough to permit required nailing without splitting.
Backer depth to equal joist depth minus 3¼″.

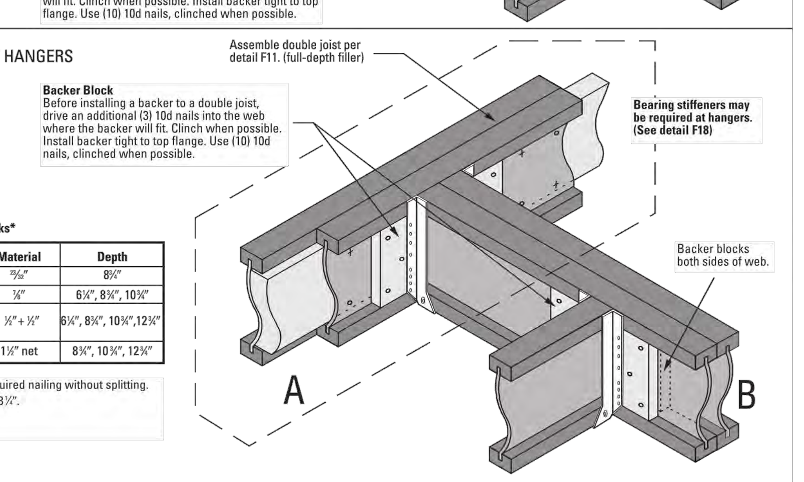

F14 STRINGER TO JOIST CONNECTION

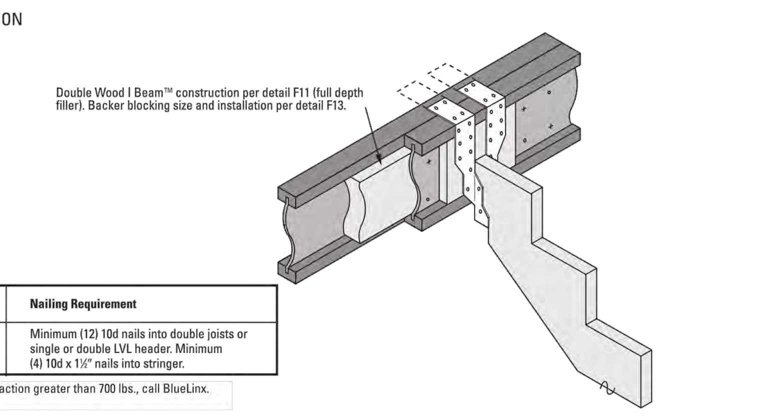

Hangers for 14′ (max) Stringer	Nailing Requirement
United Steel Products MSH 218 OR Simpson Strong-Tie® THA 218	Minimum (12) 10d nails into double joists or single or double LVL header. Minimum (4) 10d x 1½″ nails into stringer.

For stringers longer than 14′ or stringer reaction greater than 700 lbs., call BlueLinx.

Floor Details

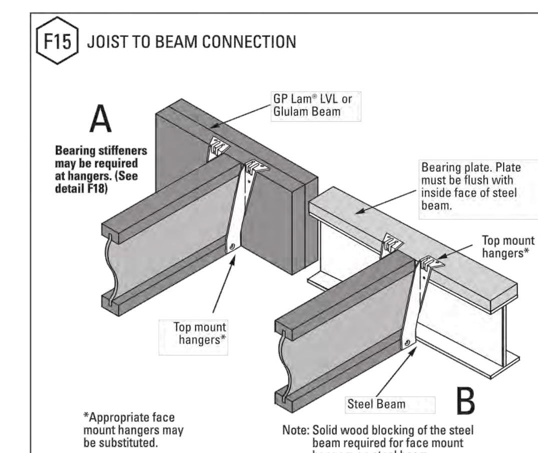

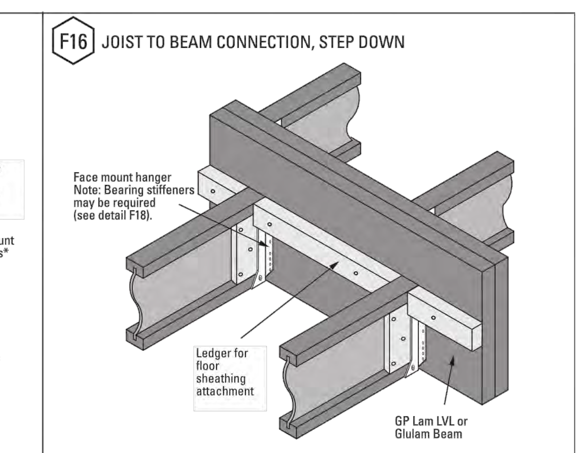

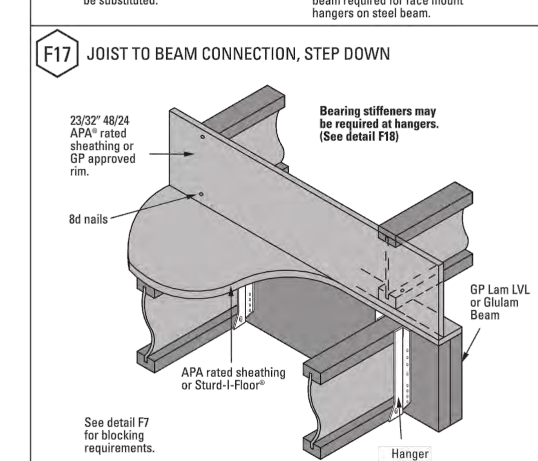

F18 BEARING STIFFENERS

Joist	Stiffener Size	Nails
GPI 20	⅝″ × 2⁵⁄₁₆″	(3) 10d
GPI 40	½″+½″ × 2⁵⁄₁₆″	(3) 10d
GPI 65	½″+½″ × 2⁵⁄₁₆″	(3) 10d
WI 40	½″+½″ × 2⁵⁄₁₆″	(3) 10d
WI 60	½″+½″ × 2⁵⁄₁₆″	(3) 10d
WI 80	1½″ × 2⁵⁄₁₆″	(3) 12d

Minimum stiffener width is 2⁵⁄₁₆″

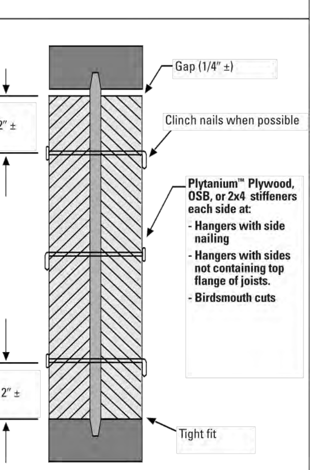

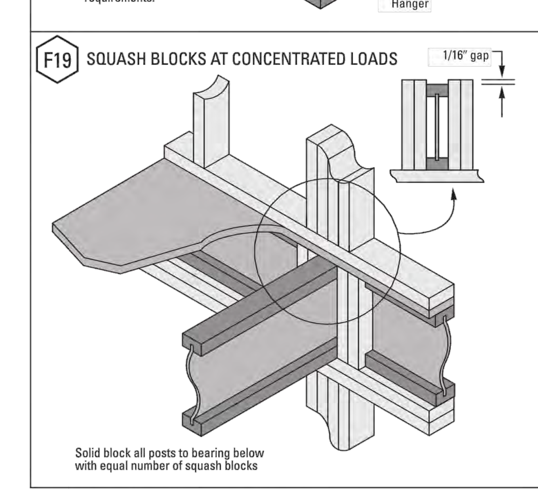

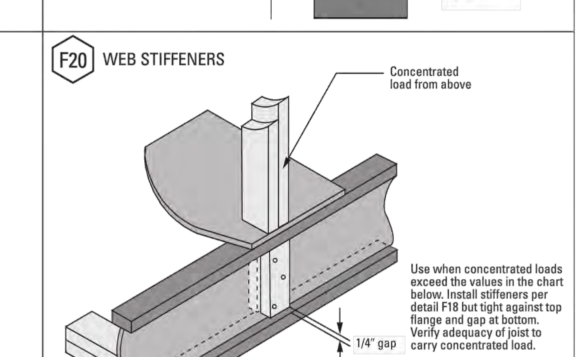

Joist Depth all series	Web stiffeners required if concentrated load exceeds
9½″	1120 lbs
11⅞″	1420 lbs
14″	1500 lbs
16″	1500 lbs

01 ENGINEERED LUMBER TYPICAL DETAILS
SCALE: N.T.S.

No:	Date:	Revision:
01	01-24-22	DRAWING UPDATE

HERITAGE MADISON ARCHITECTURE, LLC.
Architecture Design Interiors
1171 Madison Ave., Suite 201
Paterson, N.J. 07503
Tel: (973) 689 8780
Fax: (862) 239 1888
admin@hmallc.net www.hmallc.net

Project No: 2173
Project: PROPOSED SINGLE FAMILY DWELLING
109 East Orchard Street
Allendale, New Jersey
Client:
Date: Oct. 4, 2021
Block: 1901
Lot: 10
Scale: AS NOTED
Drawing title: Engineered Lumber Details
Drawn By: --
Checked By: --
Seal: Nassir Almukhtar, RA
NJ Lic. # 16036
NY Lic. # 030342
Drawing No: A-05

© Heritage Madison Architecture, LLC

F:\Dwg\0-2021-JOBS\2173-Allendale-109 E Orchard St-Shoaeb\CD\Plot\A-05.dwg, 2/24/2022 10:26:58 AM, DWG To PDF.pc3

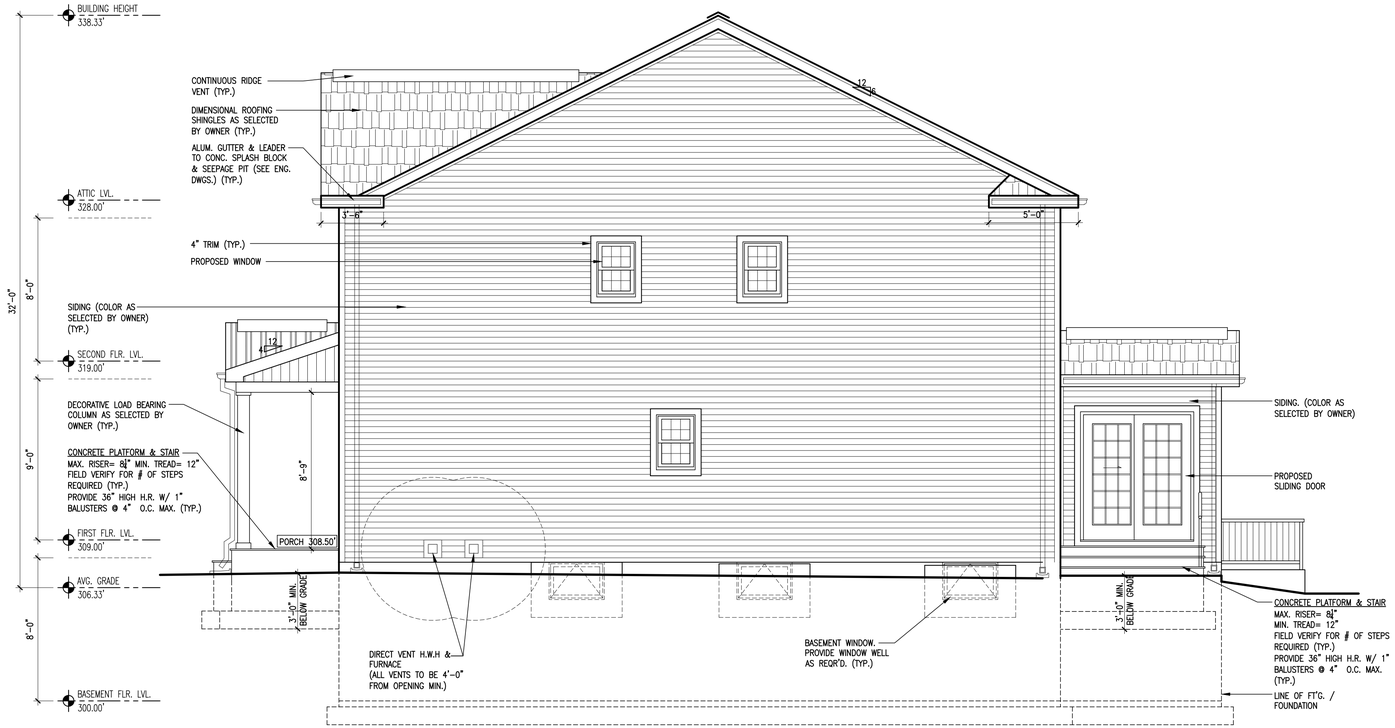

01 RIGHT SIDE ELEVATION

SCALE: 1/4" = 1'-0"

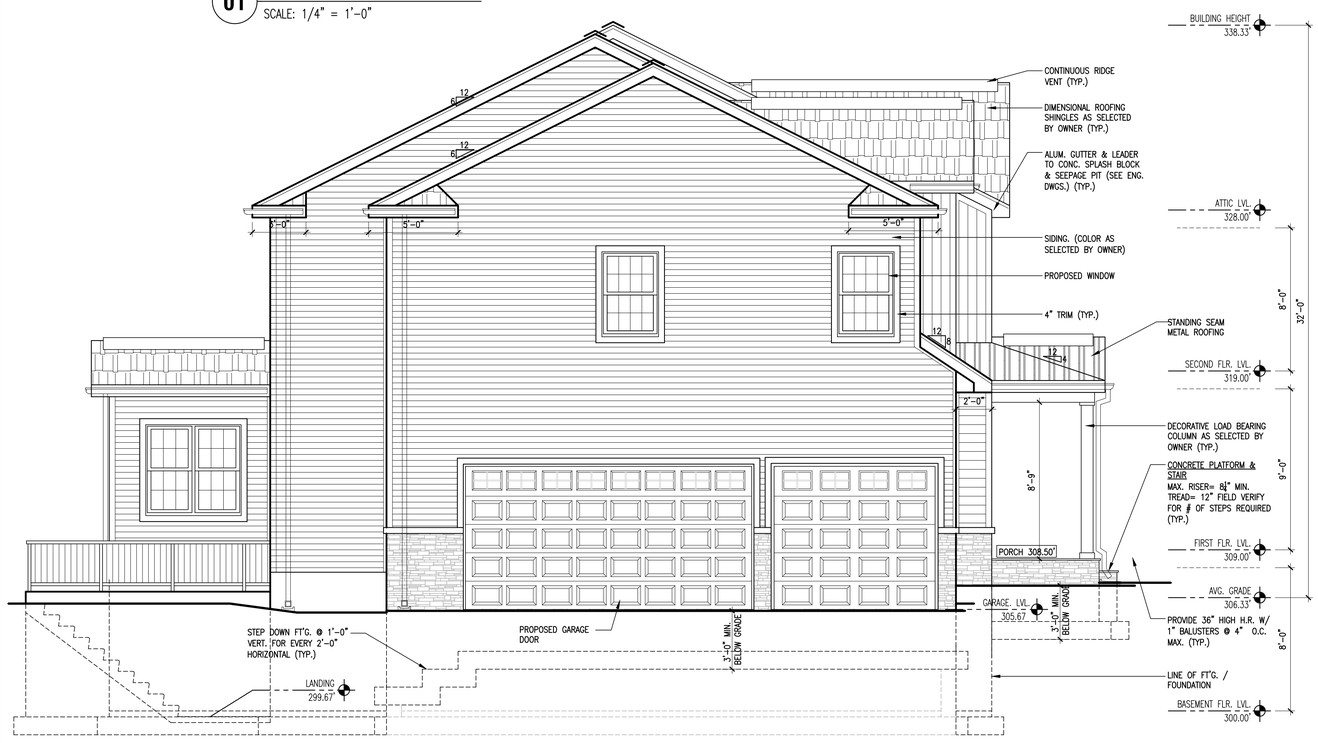

02 LEFT SIDE ELEVATION

SCALE: 1/4" = 1'-0"

No:	Date:	Revision:
01	01-24-22	DRAWING UPDATE

HERITAGE MADISON ARCHITECTURE, LLC.
Architecture Design Interiors
1171 Madison Ave., Suite 201
Paterson, N.J. 07503
Tel: (973) 689 8780
Fax: (862) 239 1888
admin@hmallc.net www.hmallc.net

Project No: 2173

Date: Oct. 4, 2021

Block: 1901

Lot: 10

Scale: AS NOTED

Drawn By: --

Checked By: --

Project: PROPOSED SINGLE FAMILY DWELLING
109 East Orchard Street
Allendale, New Jersey

Client:

Drawing title: Elevations

Seal:
Nassir Almukhtar, RA
NJ Lic. # 16036
NY Lic. # 030342

Drawing No: A-06

© Heritage Madison Architecture, LLC

F:\Dwg\0-2021-JOBS\2173-Allendale-109 E Orchard St-Shoaeb\CD\Plot\A-06.dwg, 2/24/2022 10:27:05 AM, DWG To PDF.pc3

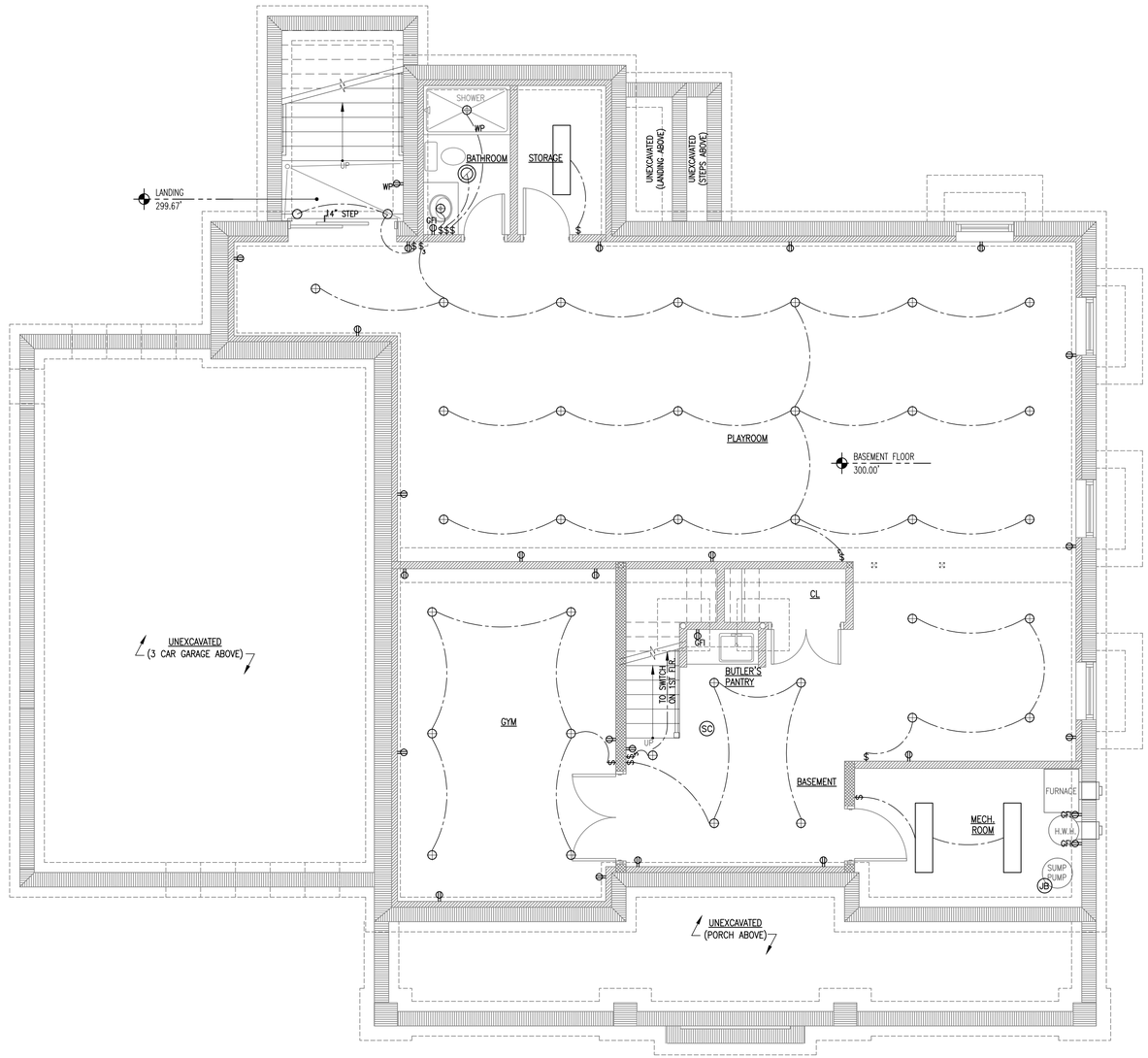

01 BASEMENT FLOOR (ELECTRICAL)

SCALE: 1/4" = 1'-0"

N

ELECTRICAL LEGEND

SYMBOL	DESCRIPTION
	INTERIOR GRADE SURFACE MTD. LIGHT FIXTURE
	SINGLE POLE LIGHT SWITCH
	THREE WAY LIGHT SWITCH
	FOUR WAY LIGHT SWITCH
	DUPLEX RECEPTACLE OUTLET
GFI	DUPLEX RECEPTACLE OUTLET GROUND FAULT INTERRUPT
WP	WEATHER PRROF DUPLEX RECEPTACLE OUTLET
JB	JUNCTION BOX
SC	SMOKE/CARBON MONOXIDE DETECTOR HARD WIRED W/BATTERY PACK
S	SMOKE HARD WIRED W/BATTERY PACK
	EXHAUST FAN/LIGHT FIXTURE COMB.
	CHANDELIER
	LIGHT/ CLG. FAN
	WALL MOUNTED LIGHT FIXTURE
	1'x4' FLOURECENT STRIP LIGHT FIXTURE
	PENDANT LIGHT FIXTURE
	LIGHT FIXTURE/GARAGE DOOR OPENER COMB.
MS	EXTERIOR LIGHT FIXTURE W/MOTION SENSOR

No:	Date:	Revision:
01	01-24-22	DRAWING UPDATE

HERITAGE MADISON ARCHITECTURE, LLC.
Architecture Design Interiors
1171 Madison Ave., Suite 201
Paterson, N.J. 07503
Tel: (973) 689 8780
Fax: (862) 239 1888
admin@hmallc.net www.hmallc.net

Project No: 2173

Date: Oct. 4, 2021

Block: 1901

Lot: 10

Scale: AS NOTED

Drawn By: --

Checked By: --

Project: PROPOSED

SINGLE FAMILY DWELLING
109 East Orchard Street
Allendale, New Jersey

Client:

Drawing title: Basement Floor Plan (Electrical) Legend, Notes

Seal:
Nassir Almukhtar, RA
NJ Lic. # 16036
NY Lic. # 030342

Drawing No: E-01

© Heritage Madison Architecture, LLC

F:\Dwg\0-2021-JOBS\2173-Allendale-109 E Orchard St-Shoaeb\CD\Plot\E-01.dwg, 2/24/2022 10:27:10 AM, DWG To PDF.pc3

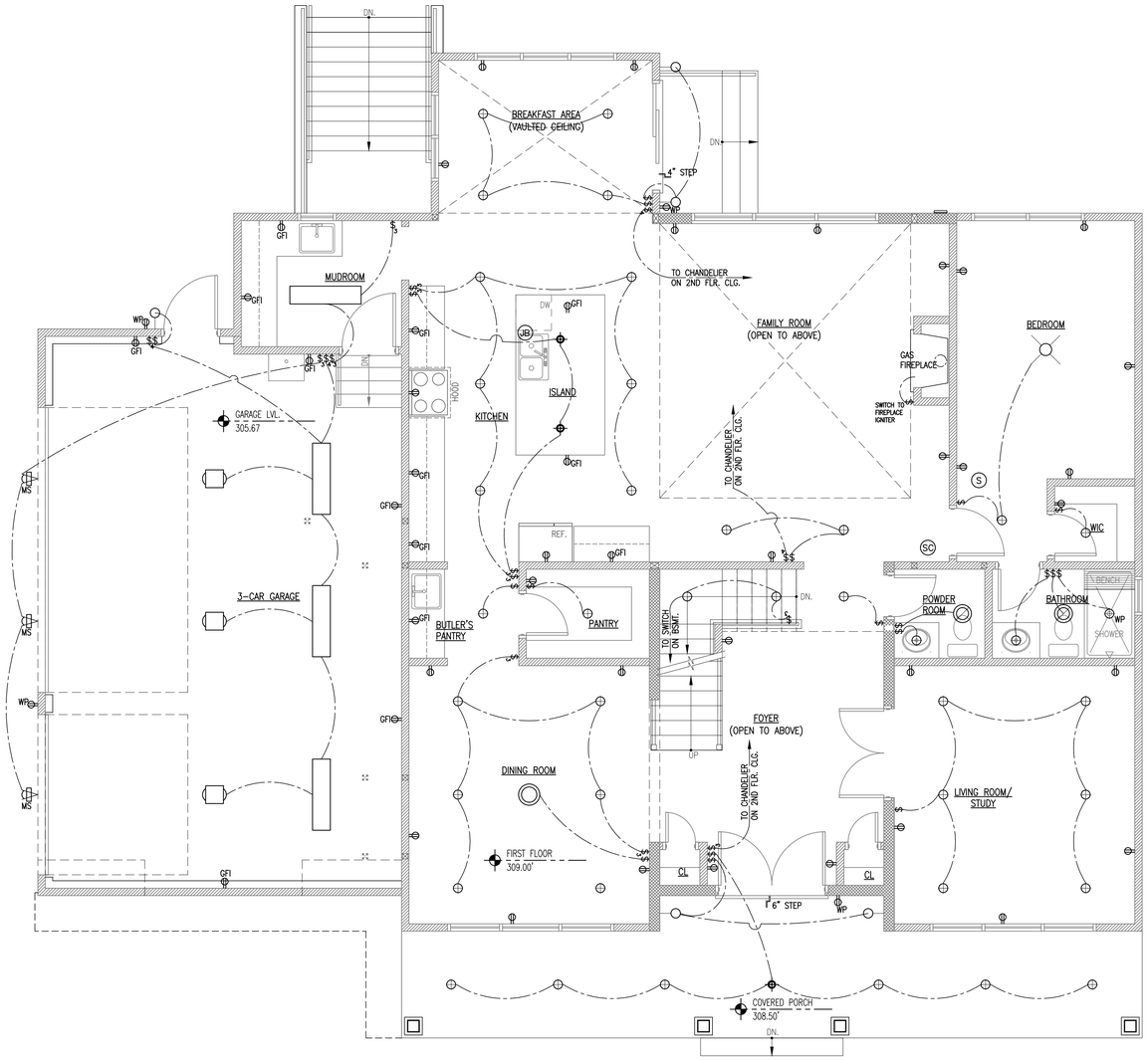

01 FIRST FLOOR (ELECTRICAL)

SCALE: 1/4" = 1'-0"

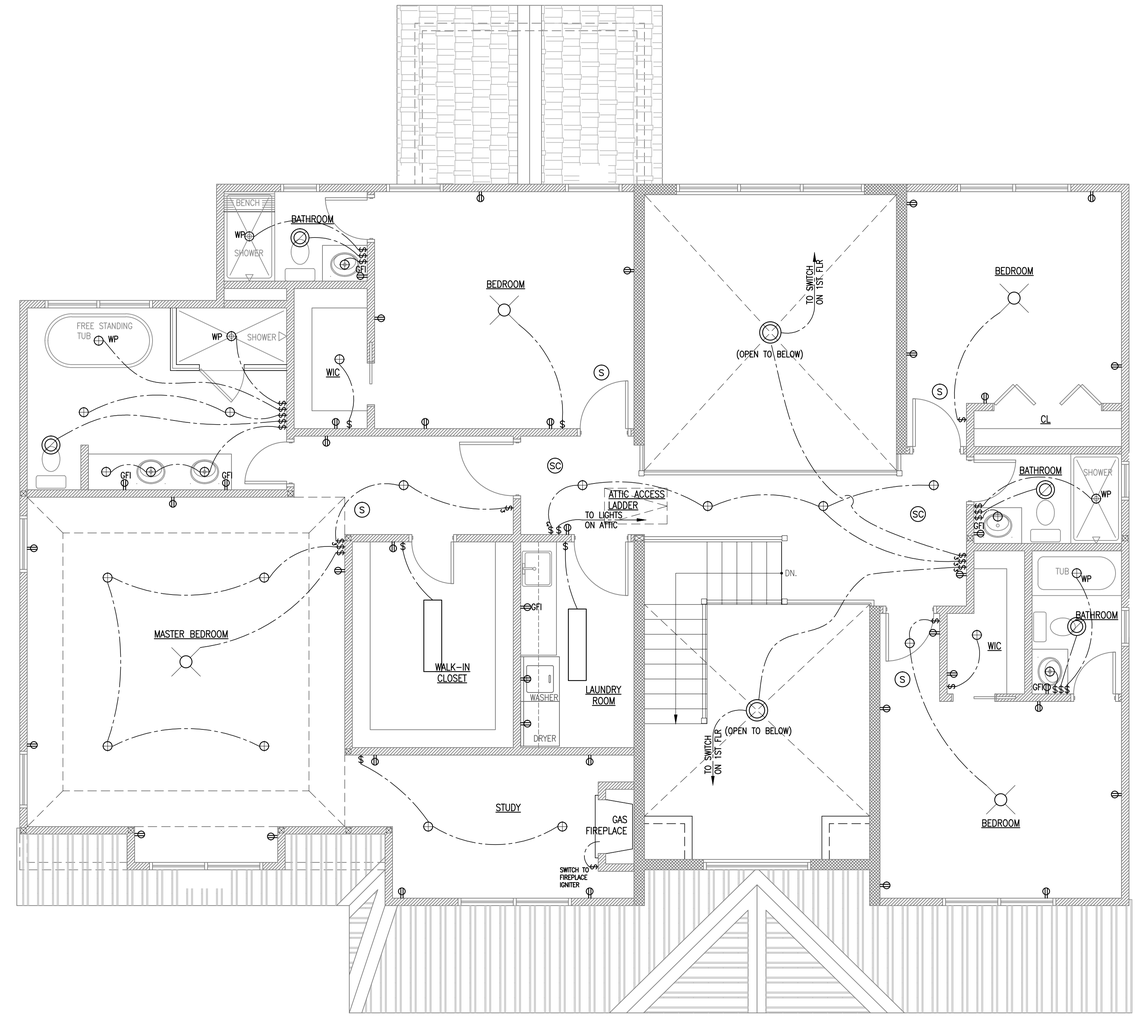

02 SECOND FLOOR (ELECTRICAL)

SCALE: 1/4" = 1'-0"

ELECTRICAL LEGEND

SYMBOL	DESCRIPTION
	INTERIOR GRADE SURFACE MTD. LIGHT FIXTURE
	SINGLE POLE LIGHT SWITCH
	THREE WAY LIGHT SWITCH
	FOUR WAY LIGHT SWITCH
	DUPLEX RECEPTACLE OUTLET
GFI	DUPLEX RECEPTACLE OUTLET GROUND FAULT INTERRUPT
WP	WEATHER PRROF DUPLEX RECEPTACLE OUTLET
JB	JUNCTION BOX
SC	SMOKE/CARBON MONOXIDE DETECTOR HARD WIRED W/BATTERY PACK
S	SMOKE HARD WIRED W/BATTERY PACK
	EXHAUST FAN/LIGHT FIXTURE COMB.
	CHANDELIER
	LIGHT/ CLG. FAN
	WALL MOUNTED LIGHT FIXTURE
	1'x4' FLOURECENT STRIP LIGHT FIXTURE
	PENDANT LIGHT FIXTURE
	LIGHT FIXTURE/GARAGE DOOR OPENER COMB.
MS	EXTERIOR LIGHT FIXTURE W/MOTION SENSOR

No:	Date:	Revision:
01	01-24-22	DRAWING UPDATE

HERITAGE MADISON ARCHITECTURE, LLC.
Architecture Design Interiors
1171 Madison Ave., Suite 201
Paterson, N.J. 07503
Tel: (973) 689 8780
Fax: (862) 239 1888
admin@hmallc.net www.hmallc.net

Project No: 2173
Date: Oct. 4, 2021
Block: 1901
Lot: 10
Scale: AS NOTED
Drawn By: --
Checked By: --

Project:
PROPOSED
SINGLE FAMILY DWELLING
109 East Orchard Street
Allendale, New Jersey
Client:

Drawing title:
First Floor Plan (Electrical)
Second Floor Plan (Electrical)
Legend, Notes

Seal:
Nassir Almukhtar, RA
NJ Lic. # 16036
NY Lic. # 030342

Drawing No: E-02

© Heritage Madison Architecture, LLC

F:\Dwg\0-2021-JOBS\2173-Allendale-109 E Orchard St-Shoaeb\CD\Plot\E-02.dwg, 2/24/2022 10:27:15 AM, DWG To PDF.pc3

ALLENDALE LAND USE BOARD
APPLICATION CHECK LIST

NAME Pergola, Vincent & Peterson, Anna BLOCK 511 LOT 7

ADDRESS 38 East Crescent Avenue, Allendale, New Jersey

ZONE AA TYPE OF VARIANCE

BRIEF DESCRIPTION OF APPLICATION

SPECIFIC VARIANCE(S) REQUIRED Side yard steback of 5.7 feet and 13.5 feet, where 20 feet is required; front yard setback of 25 feet, where 40 feet is required; height of 37.1 feet, where a maximum of 35 feet is permitted.

ADMINISTRATIVE REQUIREMENTS		STATUS
1.	Application form complete	X
2.	Fee paid	X
3.	Denial by Building Inspector	X
4.	Affidavit of Service	
5.	Proof of Publication	
6.	Taxes Current	X
7.	Plot Plan	X
8.	Maps	X
9.	Photographs	
10.	Email address	X
11.	Miscellaneous	

3/9/22
Date

Applicant's Signature
Bruce E. Whitaker, Esq. Attorney for Applicant

REQUIRED MATERIALS AND CHECKLIST FOR
ALLENDALE LAND USE BOARD HEARINGS

This checklist and attached sample drawings are provided to ensure that you or your professionals are prepared for your hearing and that your application is complete. All items should be supplied to the extent that they are applicable to the specific application. If information is insufficient or missing, the board may deem your application incomplete and adjourn your hearing until it receives all necessary documentation. Please create 15 packets of the below information.

I. PROVIDE AN ACCURATE SURVEY FOR THE PROPERTY IN QUESTION WHICH CONTAINS THE FOLLOWING INFORMATION:

_x_ 1. Footprint of existing buildings or structures.

_x_ 2. Precise distances from all property lines to closest point of principal building including steps, deck or other extensions of the building.

_x_ 3. The location and precise distances of accessory buildings, such as garages and sheds, to property lines and the principal building or structure.

_x_ 4. The location and dimensions of steps, patios, driveways, decks, pools and all other improved impervious areas and their precise distances to nearest property line and structures.

_x_ 5. An accurate depiction of the proposed construction or alteration including the information requested in 1, 2, 3 and 4 above.

_x_ 6. The precise distances from all property lines to the closest point of the proposed construction.

II. AN ENLARGED TAX MAP DEPICTING PROPERTY IN QUESTION AND ITS RELATIONSHIP TO NEIGHBORING PROPERTIES.

_x_ 1. The precise distances from the existing buildings or structure in question to the closest point of all neighboring buildings and structures.

_x_ 2. The precise distances from the proposed construction to the closest point of all neighboring buildings and structures.

III. STRUCTURAL DIMENSIONS:

_x_ 1. All dimensions of existing building or structure.

_x_ 2. All dimensions of proposed building or structure.

_x_ 3. Height of existing building or structure.*

_x_ 4. Height of proposed building or structure.*
*(height to be measured from lowest point of the ground that abuts the foundation of the structure to the highest point on the roof.)

_x_ 5. Front, rear and side elevations of the proposed structure.

IV. FLOOR PLANS.

_x_ 1. Floor plans of the existing interior of the building containing all relevant dimensions.

_x_ 2. Floor plans of the interior of the proposed construction containing all relevant dimensions.

_x_ 3. Precise square footage of the existing building.

_x_ 4. Precise square footage of the proposed construction.

_x_ 5. Floor area ratio calculation pursuant to Section 270-63 of the zoning ordinance (required for all applications)

V. PHOTOGRAPHS.

_x_ 1. Photographs of the property in question and existing improvements may be helpful to the Board in presenting your information.

_x_ 2. Photographs of views from the existing building or structure to neighboring properties and buildings which show existing plantings or other buffers are also helpful and may be requested by the Board.

(All photographs should be taken by you or someone who can testify to the Board as to when they were taken and that the photographs represent an accurate depiction of what they saw at the time.)

VI. LANDSCAPING AND LAND FEATURES.

____ 1. The survey, plat or plan should locate and describe any proposed landscaping to be done in connection with the application.

____ 2. The location of any unusual property features should be indicated, such as flood plain, streams, wooded areas, rock outcroppings or steep slopes.

VII. PREVIOUS APPLICATIONS. – **None**

____ 1. Applicants should be prepared to discuss prior applications to the Land Use Board, Board of Adjustment and Planning Board and the results thereof.

VIII. Any additional information which may be deemed necessary by the Land Use Board, its Consultants or Borough departments and agencies.

NOTE: ALL DIMENSIONS AND DISTANCES MUST BE DEPICTED TO SCALE ON DRAWINGS AND PLANS.

Any questions regarding your hearing or the checklist should be directed to the Land Use Administrator at the Borough of Allendale Municipal Building 201-818-4400 x202. Please submit fifteen (15) packets with copies of all drawings and plans to the Land Use Administrator at least ten (10) days prior to the hearing. It is suggested that the property owner refer to the appropriate building code to assure proper engineering and construction techniques, or to secure the services of a local, reputable architect and/or engineer.

2/23/22
Date

Signature
Vincent Pergola

2/23/22
Date

Anna Peterson

ADDENDUM

Vincent Pergola and Anna Peterson (hereinafter referred to as the "Applicant") are the Owners of 38 East Crescent Avenue, Allendale, New Jersey, shown on the Tax Map of the Borough of Allendale as Block 511, Lot 7 (hereinafter referred to as the "Property"). The Property is located in the AA Residential Zone.

The Property is a nonconforming lot having a lot area of 10,817 square feet, where 26,000 square feet is required. There is a single family two-story dwelling unit on the Property that was built prior to the creation of the current Allendale Zoning Ordinances. Besides being deficient in lot area, the Property has the following nonconformities:

A. Lot width of 58.16 feet, where 100 feet is required;

B. Front yard setback of 31.5 feet, where 41.4 feet is required;

C. Side yard setback of 5.7 feet, where 20 feet is required.

The Applicant is proposing to construct a two-story addition to the rear of the existing dwelling unit, and to construct a porte-cochere on the southerly side of the dwelling unit. The porte-cochere is an open structure of 180 square feet, and it is stipulated that it would always remain open. The purpose is to permit a car to be parked there out of the weather for easy access into the dwelling unit recognizing that the detached garage is a considerable distance to the rear of the Property.

There is currently a side yard setback of 5.7. The Applicant proposes the rear two-story addition to continue as an extension of the northerly line of the existing dwelling unit. The dwelling unit itself is skewed on the Property. The 5.7 foot side yard setback is existing. By virtue of the Applicant's proposal, the left side, side yard setback is following the same nonconformity, but the side yard setback widens to 7.4 feet at the end of the addition.

The porte-cochere would have a side yard setback of 13.5 feet, and a front yard setback of 25 feet.

The Applicant seeks the following variances:

A. Side yard setback existing of 5.7 feet which runs to 7.4 feet, where 20 feet is required for the addition;

B. Side yard setback of 13.5 feet to the porte-cochere, where 20 feet is required;

C. Front yard setback of 25 feet to the porte-cochere, where 40 feet is required, or based upon average setback of neighboring properties, 30 feet is required;

D. Roof height for the addition of 37.1 feet, where 35 feet is the maximum permitted.

The Zoning Officer of the Borough of Allendale reviewed the plans and confirmed that variance relief is required as previously set forth in this Addendum. His review letter is attached.

It is submitted that variance relief can be granted in this instance under N.J.S.A. 40: 55D-70(C)(1), and (C)(2) for the following reasons:

A. **Side yard setback for the proposed addition** - The Property is substandard by way of area, and by way of width. To respect both side yard setbacks in this instance would require a building to be constructed 20 feet off of each side lot line. The 20 foot requirement is based upon and contemplates a lot width of 100 feet which is required under the Allendale Zoning Ordinance. This lot has only 58.16 feet, so to comply with the Ordinance a building width could only be 18.16 feet wide.

Compliance with the Zoning Ordinance in this instance would constitute a hardship. There is no detriment to the Zone Plan or Zoning Ordinances of the Borough of Allendale relative to this proposal. The addition is to the rear of the existing dwelling unit. The setback follows the building line that already exists. The current side yard setback is 5.7

feet. The Applicant's proposed addition based upon the dwelling unit being skewed creates a wider side yard setback and expands it to 7.4 feet. Therefore, there is no exacerbation of the pre-existing nonconforming side yard setback.

B. **Porte-cochere** - As shown on the Architectural Plans, the porte-cochere which is listed as a carport on the Site Plan, is an open area for a car to park to allow people easy access to a car out of weather conditions for entry and exiting the dwelling unit. It is a classic style that fits, architecturally and aesthetically with the style of this old dwelling unit. Most importantly, it is an open structure and the only thing that is infringing into the side yard setback is the roof and the columns holding the roof. It is an open air structure which will always remain open, and that is a stipulation of this proposal for variance relief. The dwelling unit itself has a side yard setback that is conforming of 23.7 feet. This open structure is approximately 10 feet in width, creating a side yard setback to the columns of 13.5 feet. Again, based upon the deficiency in lot width, compliance with the Zoning Ordinance in this instance for the side yard setback, creates a hardship for the Applicant.

   There is no substantial detriment to the Zone Plan or Zoning Ordinances in this instance. The structure is an open structure. It fits well within the architectural framework of the dwelling unit itself, and is very characteristic for a structure of this vintage. It is next to an open porch and covered landing area, and can easily be accommodated on a lot with this width.

The proposed porte-cochere requires a front yard setback. Recognizing that the porte-cochere is open, it compliments the covered porch which also has a deficient front yard setback. The front yard setback is comprised of the roof and the columns. The current front yard setback

is 31.5 feet to the structure itself. The front yard setback to the covered porch and the porte-cochere would basically line up and be 25.3 feet.

C. **Height Variance** - The Property has an unusual condition in that it slopes down in the rear beyond the existing dwelling unit. The Applicant is proposing to construct a two-story addition that will follow the roof lines of the existing dwelling. To reduce the roof lines would create an addition that would look like an addition and would not be synthesized with the architectural elements and the roof lines that exist.

It is recognized that height is measured under the Allendale Ordinance from the lowest point around the dwelling unit to the tallest point of the dwelling unit. The unusual topographic conditions in this instance creates the necessity for variance relief. The roof elevation is 149.1 feet, and the elevation to the rear is 112 feet, which equals 37.1 feet. Compliance in this instance with the Zoning Ordinance based upon this unusual condition, would constitute a hardship to the Applicant.

There is no substantial detriment to the Zone Plan or Zoning Ordinances of Allendale relative to this proposal. The addition is to the rear, and is not readily discernible from East Crescent Avenue. Most importantly, the roof lines up between the existing structure and addition so that from an architectural and aesthetic standpoint, the addition fits properly with the existing dwelling unit and respects the architectural elements of this classic style vintage building.

Variance relief is also appropriate for all the variances being sought under N.J.S.A. 40:55D-70(C)(2). It is recognized that aesthetic considerations can be considered for variance relief and in this instance, the total upgrade of this classic building, preserving the style of this building and creating architectural elements for the vintage of this building as it pertains to the

porte-cochere together with creating an addition to upgrade the living space of the dwelling unit, are all appropriate in this instance. The Applicant's proposal as it pertains to upgrading the dwelling unit, creating the porte-cochere, creates a better streetscape. Interestingly, even though the lot has an area of less than 40% of what is required, the Applicant's proposal meets the requirements for gross building area and for floor area ratio. In addition, impervious coverage on a lot with this deficiency in area, is only 35.1%, where 51.88% is permitted.

It is the Applicant's position that variance relief can be granted based upon the reasons set forth in this Addendum.

BOROUGH OF ALLENDALE
CODE ENFORCEMENT OFFICE
500 West Crescent Avenue Allendale, NJ 07401

Anthony Hackett
Zoning Official

Phone: (201) 818-4400 x208
Fax: (201) 825-1913

MEMORANDUM

TO: Vincent Pergola & Anna Peterson
38 E Crescent Ave
Allendale, NJ 07401

FROM: Anthony Hackett, Zoning Official/Construction Official

CC: Linda Garofalo Land use Administrator

RE: Two story addition, and adding a car port, and expanding the driveway

DATE: January 19, 2022

The Allendale Building/Zoning Department received the following documents:

A. Borough of Allendale Zoning Review Application

B. Drawings prepared by Harry Goldstein Architect, Monsey, NY

C. Site Plan prepared by Lantelme, Kurens & Associates P.C. Surveyors

I have reviewed these documents and the Borough of Allendale Zoning Ordinances and I must deny your application for the following reason(s):

1) 38 E Crescent Ave. is located in the AA Zone, and is considered a non-conforming existing structure. The minimum side yard setbacks for your home are 20'. Currently you have 23.7' on the right side and 5.7' on the left, (Existing Non-conforming). Your proposed addition on the left side is following that same non-conformity. **See Borough Ordinance 270-37.**

2) Your proposed car port on the right side creates a side yard setback of 13.5' where 20' is required, see **Borough Ordinance 270-54C**

3) The proposed car port creates a front yard setback of 25' where 40' is required, or possibly 30' depending on the neighbors, **See Borough Ordinance 270-54B**

4) The maximum height of a structure is 35' measured from the lowest point around the house to the tallest point of the house. The property slopes down in the rear and according to the site plan, the roof peak elevation is 149.1 and the elevation at the rear is 112 which equals 37.1', not including the basement stairwell which is obviously lower, **See Borough Ordinance 270-54A**

You are hereby notified that you have the right under N.J.S.A. 40:55D-72 to appeal this decision to the Zoning board of adjustments of the Borough of Allendale within 20 days from the date of the decision. For further information please visit. http://allendalenj.gov/zoning-board-of-adjustments/

Anthony Hackett
Construction Official

BOROUGH OF ALLENDALE
500 West Crescent Avenue
Allendale, New Jersey 07401

DATE: February 24, 2022

VERIFICATION OF TAXES PAID

Pursuant to Municipal Land Use Law:

This is to certify that taxes for the year _2022_____ are paid through

the _____1st ____Quarter

BLOCK: 511 LOT: 7

OWNER OF RECORD: Vincent Pergola and Anna Peterson

PROPERTY LOCATION: 38 East Crescent Avenue, Allendale, New Jersey
Block 511, Lot 7

Gina Wittmaack
Tax Collector

SUBURBAN

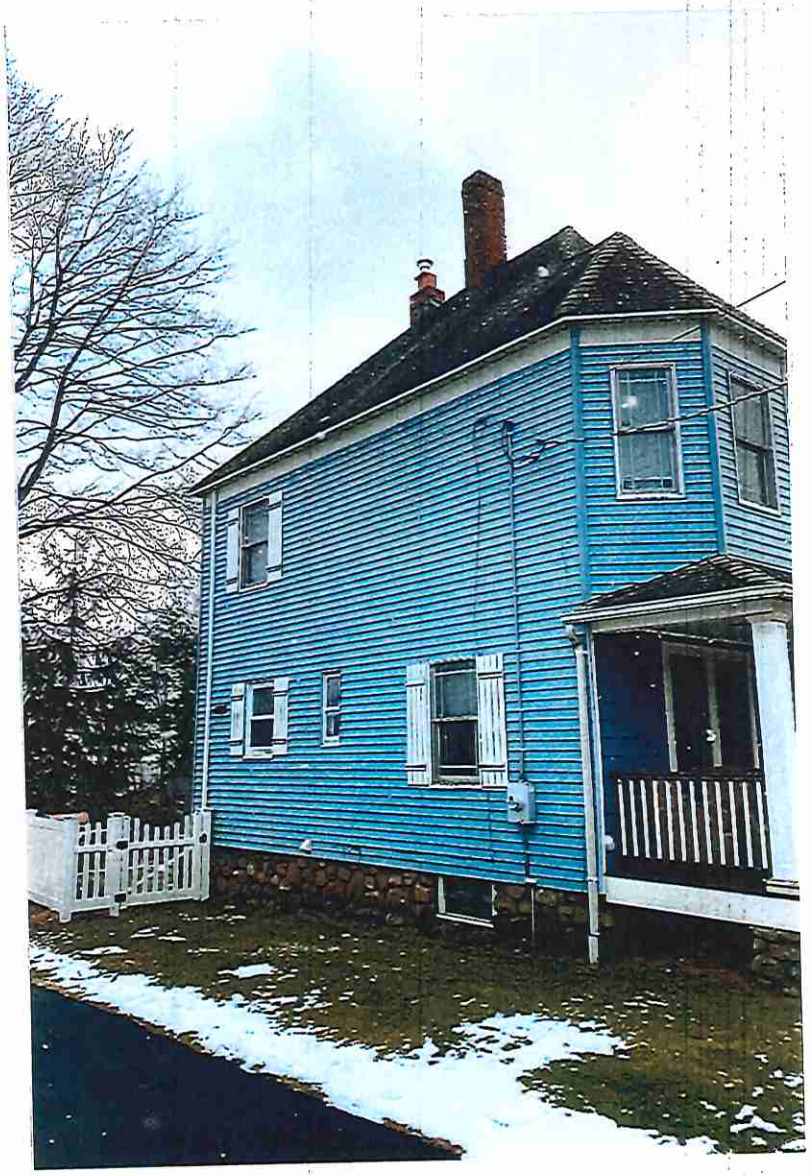

AA RESIDENTIAL ZONE				
	Required	Existing	Proposed	Variance Required
Lot Area	26,000 sf	10,817 sf	10,817 sf	No*
Lot Width	100 ft	58.16 ft	58.16 ft	No*
Setbacks				
Front Yard	41.4 ft	31.5 ft	31.5 ft	No*
Side Yard	20 ft	5.7 ft	5.7 ft	Yes*
Side Yard	20 ft	23.7 ft	23.1 ft	No
Rear Yard	50 ft	114.8 ft	93.4 ft	No
CarPort				
Front Yard	41.4 ft	NA	25.3 ft	Yes
Side Yard	20 ft	NA	13.5 ft	Yes
Bldg. Height	2 ½ sty/35 ft	35.2 ft	36.7 ft	Yes*
Gross Bldg Area**	24.84%	–	2623 sf/24.25%	No
FAR**	24.84%		2623 sf/24.25%	No
Impervious Cov.	52.88%	2816 sf/26.01%	3796 sf/35.1%	No

* Existing Non-conformity
** Per Architect.

Dwelling Living Area** – 2345 SF
Garage Area – 278 SF
Total Gross Building Area – 2623 SF

LOT COVERAGE CALCULATIONS

EXISTING	
DWELLING	706 sf
GARAGE	278
COVERED PORCH	151
TOTAL BUILDING	1135 sf = 10.6%
FRONT WALK/STEPS	81
MECH. PAD	4
REAR WALKS/STEPS	188
CELLAR ENTRANCE	24
PAVER PATIO	320
DRIVEWAY	1064
TOTAL	2816 sf = 26.0%

PROPOSED	
DWELLING	1267 sf
CARPORT	180
COVERED LANDING	57
GARAGE	278
COVERED PORCH	151
TOTAL BUILDING	1933 sf = 17.9%
FRONT WALK/STEPS	81
MECH. PAD	16
CELLAR ENTRANCE	64
REAR LANDING/STEPS	77
PAVER PATIO	320
DRIVEWAY	1305
TOTAL	3796 sf = 35.1%

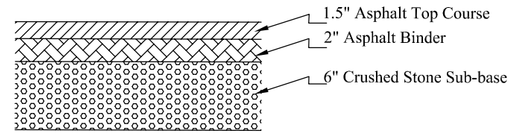

DRIVEWAY PAVEMENT DETAIL

N.T.S.

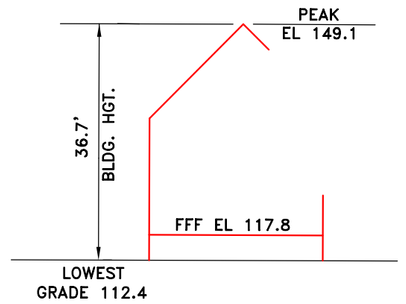

BUILDING HEIGHT CALCULATION

N.T.S.

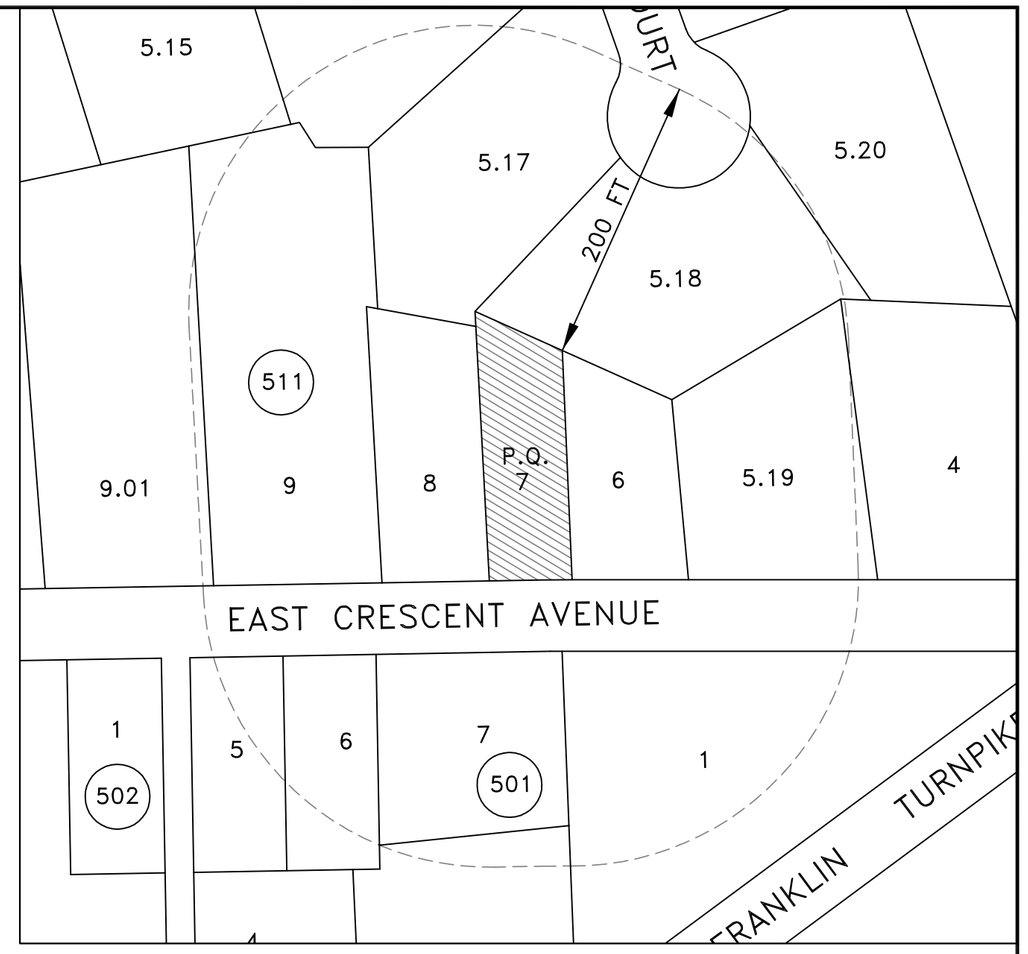

KEY MAP SCALE: 1"=150'

NOTES:

1. Applicant: Vincent Pergola
2. Property address: 38 East Crescent Avenue, Allendale, NJ.
3. Property known as Block 511 Lot 7 in accordance with the Tax Assessment Map of the Borough of Allendale.
4. Property is located in the AA Residential zone.
5. Elevations based on an assumed datum.
6. Existing spot elevations indicated with an X. Proposed spot elevations in [ ].
7. Underground utility locations to be verified and marked-out in the field prior to commencement of construction activities.
8. Location of existing utility connections from previous structure are to be inspected. If same are not in acceptable condition, new service connections shall be installed in accordance with Borough specifications.
9. Roof leaders shall be connected to proposed seepage pits as shown.
10. The applicant shall be responsible for the replacement of any curbing or pavement damaged or destroyed as a result of construction activities or in disrepair as determined by the Borough Engineer. The applicant shall be responsible to immediately remove any soil tracked or washed onto the street.
11. Applicant to contact the engineering department 48 hours prior to construction of the seepage pits to schedule an inspection.
12. Property survey performed on November 22, 2021 by Lantelme, Kurens & Associates, P.C.

FRONT OFFSETS			
BLOCK	LOT	ADDRESS	OFFSET
511	11	90 EAST CRESCENT	51.9
511	10	84 EAST CRESCENT	47.9
511	9.01	70 EAST CRESCENT	64.2
511	9	58 EAST CRESCENT	39.9
511	8	46 EAST CRESCENT	15.7
511	6	30 EAST CRESCENT	31.7
511	5.19	26 EAST CRESCENT	44.6
511	4	2 EAST CRESCENT	35.4
		AVERAGE	41.4

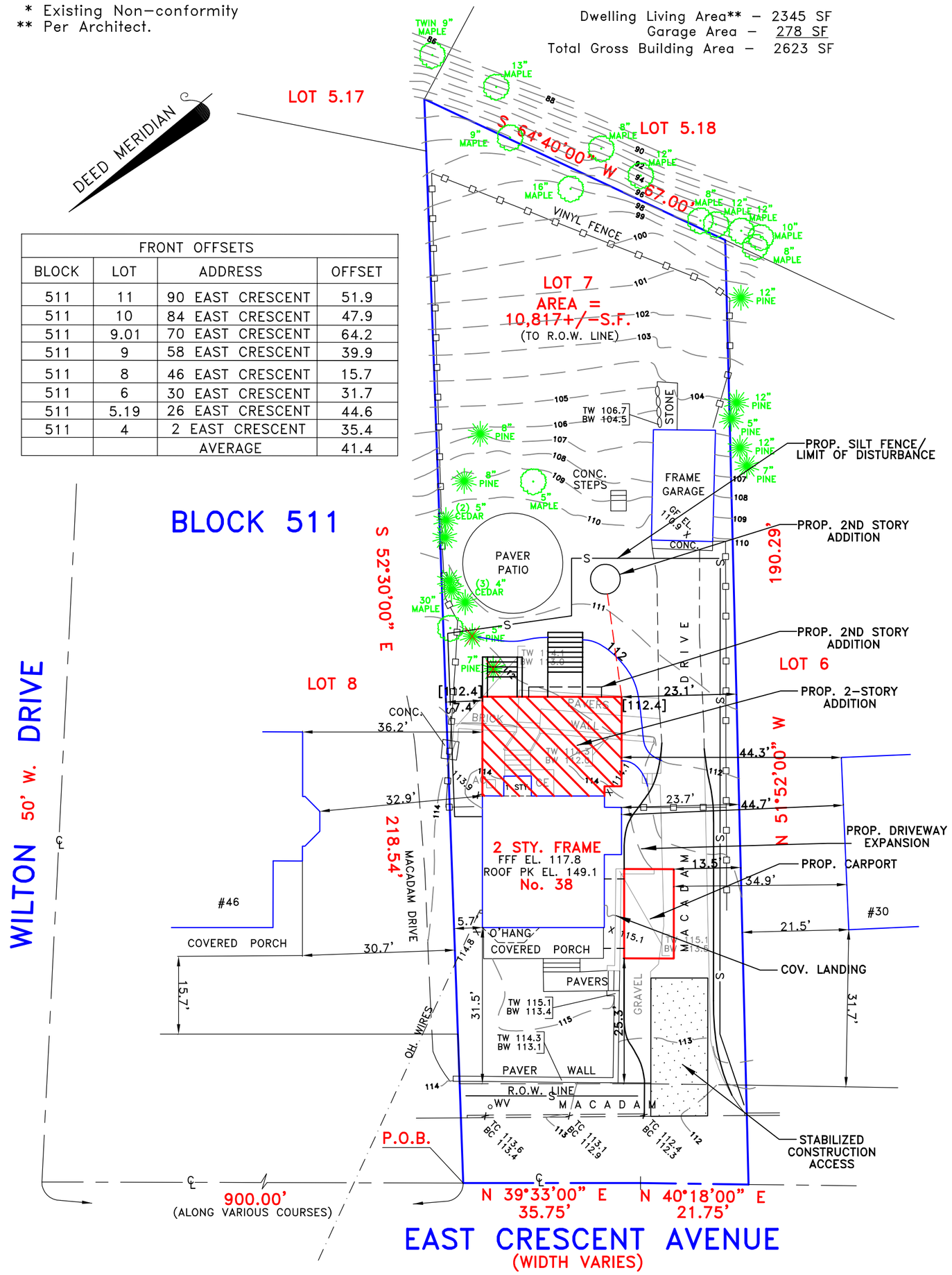

Soil Moving Requirements	
Basement	
Area = 552 sf Area w/1.5' overdig = 664 sf Avg. Cut = 5.0 ft Cut = (664 sf)(5.0 ft)= 123	
Total Cut = 123 Backfill = (664-552)(5.0)	123 yds cut 21 yds fill
Seepage Pit	33 yds cut
	6 yds fill
Total Cut	156 yds cut
Total Fill	27 yds fill
Net Soil Removed from Site	127 yds

DRAINAGE CALCULATIONS (3 Inch Rainfall Event)	
New Roof Area =	741 sf
=	106,704 si
Storage Required = 106,704 si x 3 in =	320,112 ci
=	1,386 gal
Storage Provided 1 x 1,923 gal =	1,923 gal

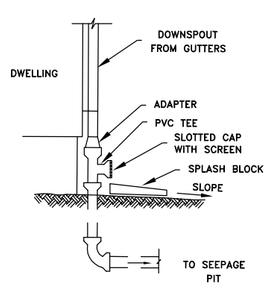

DOWNSPOUT DETAIL

N.T.S.

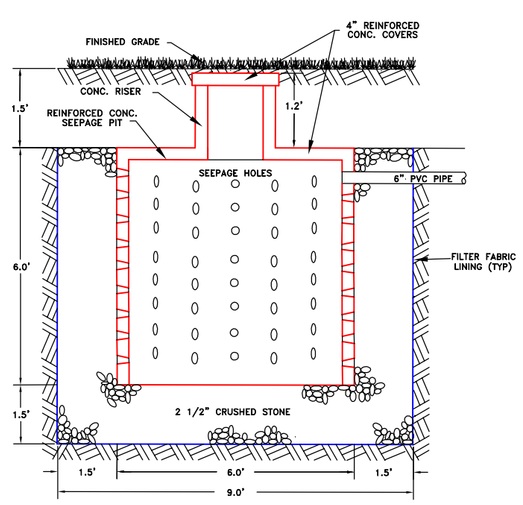

1000 GALLON SEEPAGE PIT DETAIL

N.T.S.

REVISED 3-7-22 OFFSETS TO ADJOINING DWELLINGS
REVISED 2-3-22 FRONT OFFSETS; ZONING TABLE

Lantelme, Kurens & Associates, P.C. Engineers & Land Surveyors
101 West Street, P.O. Box 486, Hillsdale, New Jersey 07642 (201) 666-2450

SCALE: 1"=20'	**SITE PLAN FOR VINCENT PERGOLA** **Lot 7 Block 511 38 East Crescent Avenue** **Borough of Allendale, Bergen County, N.J.**	CERTIFIED TO:
DATE: DECEMBER 1, 2021		
PARTY: GB/EW		
PREPARED BY: CJL		
DRAWN BY: SPM	PROPERTY SITUATED IN THE BOROUGH OF ALLENDALE, BERGEN COUNTY, NEW JERSEY.	
LOT NO. 7		
BLOCK NO. 511	MAP SOURCE: TAX ASSESSMENT MAP OF THE BOROUGH OF ALLENDALE, BERGEN COUNTY, NEW JERSEY.	Christopher Lantelme P.E. & L.S. 39580
FILE NO. SP38ECRESCENT		

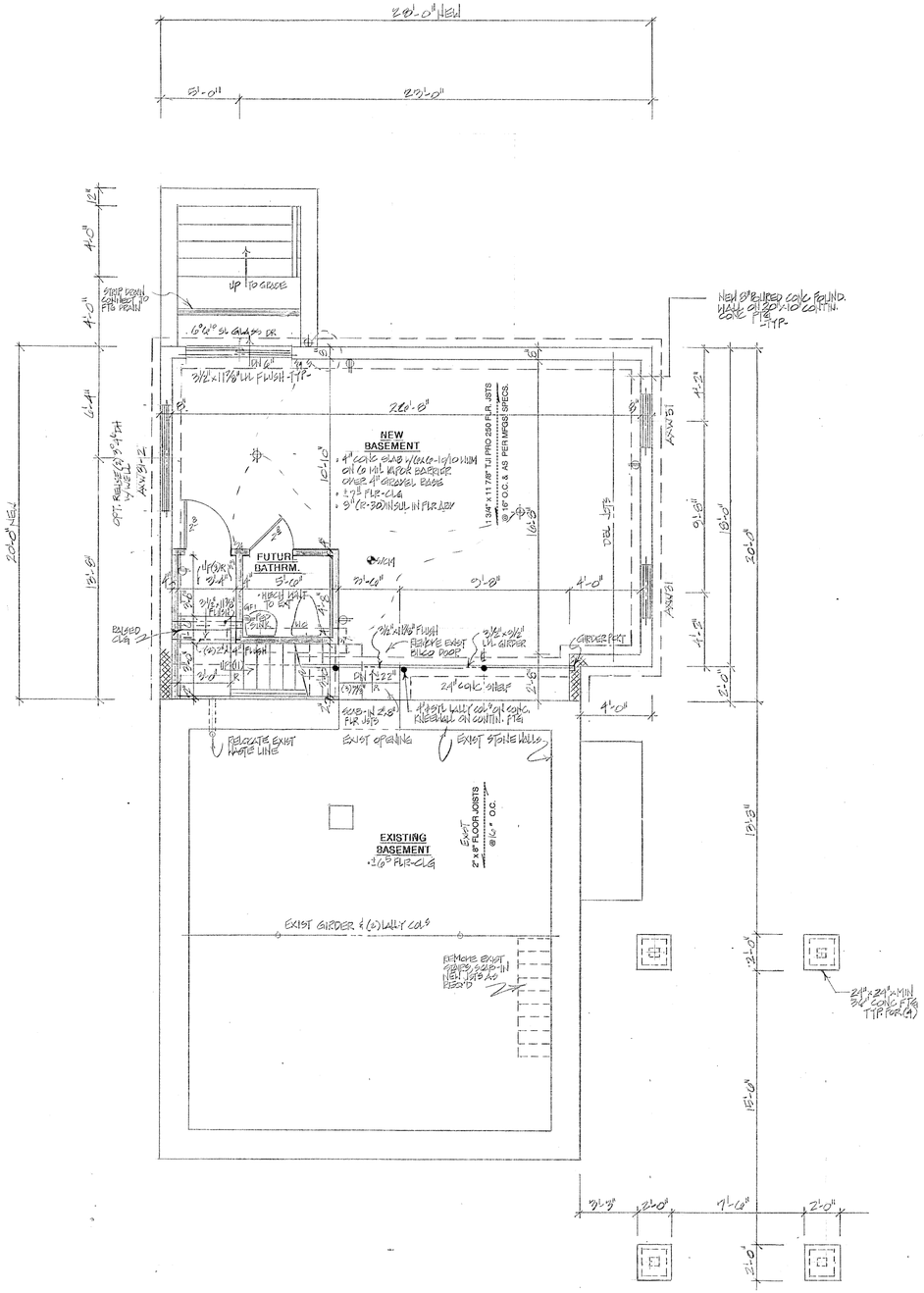

BASEMENT/FOUNDATION PLAN

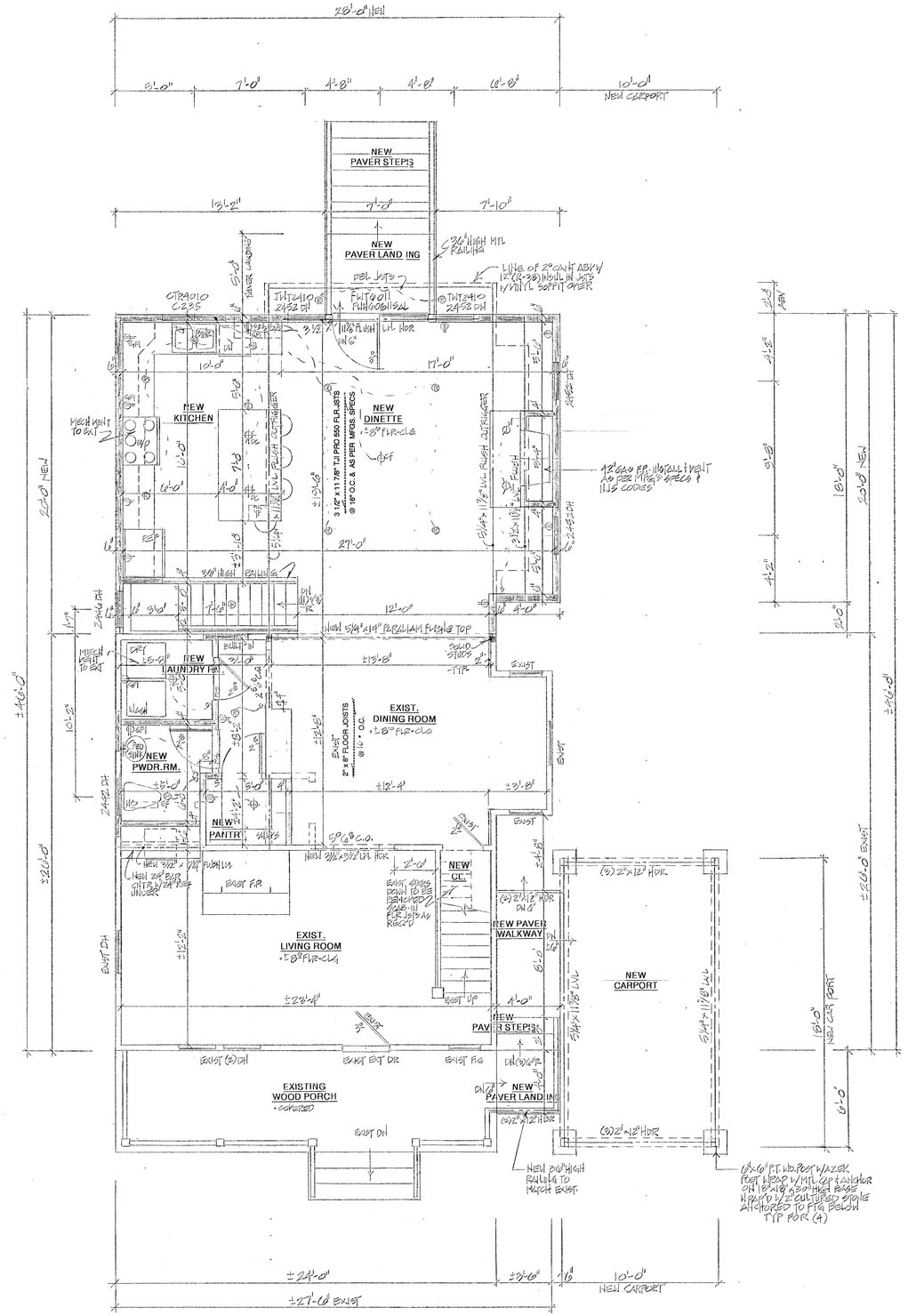

MAIN FLOOR PLAN

EXIST.S.F. :655; NEW S.F. :552
TOTAL MAIN FLR. S.F.:1207

SCALE: 1/4"=1'-0"

NEW CARPORT S.F. :236
EXIST. COVERED PORCH S.F.:144

GENERAL SPECIFICATIONS

GENERAL NOTES

1. ALL WORK PERFORMED SHALL COMPLY WITH THE BUILDING AND ZONING ORDINANCES OF THE TOWN OF ALLENDALE AND THE N.J.S. BUILDING AND ENERGY CODES.

2. THESE PLANS ARE TO BE USED FOR PERMITS & CONSTRUCTION GUIDE ONLY. IT IS NOT INTENDED TO BE USED AS A CONTRACT DOCUMENT, UNLESS OTHERWISE INDICATED BY ARCHITECT.

3. CONTRACTOR OR ANY SUBCONTRACTOR DOING ANY WORK UNDER THIS CONTRACT SHALL CARRY LIABILITY AND PROPERTY DAMAGE INSURANCE AGAINST ACCIDENTS OF ALL KINDS AND SHALL FURNISH OWNER WITH CERTIFICATE OF INSURANCE.

4. CONTRACTOR SHALL BE RESPONSIBLE FOR CHECKING ALL DIMENSIONS ON THESE PLANS AGAINST FIELD CONDITIONS PRIOR TO CONSTRUCTION AND REPORT ANY DISCREPANCIES TO THE ARCHITECT.

5. ALL DIMENSIONS AND LOCATIONS AS INDICATED ON THE DRAWINGS SHALL BE CONSIDERED AS REASONABLY CORRECT, BUT IT SHALL BE UNDERSTOOD THAT THEY ARE SUBJECT TO MODIFICATION AS MAY BE NECESSARY OR DESIRABLE AT THE TIME OF INSTALLATION TO MEET ANY UNFORESEEN OR OTHER CONDITION.

6. ARCHITECT AND RELATED CONSULTANTS HAVE NOT BEEN RETAINED FOR CONSTRUCTION INSPECTION SERVICES OR FOR APPROVAL OF SHOP DRAWINGS. ARCHITECT IS ONLY RESPONSIBLE FOR THESE WORKING DRAWINGS AND THEIR RELATED SPECIFICATIONS. IT REMAINS INCUMBENT ON THE CONTRACTOR TO INFORM THE BUILDING DEPARTMENT OR THE ARCHITECT OF ANY DISCREPANCY OR CHANGE ON APPROVED PLANS AND OF ANY UNFORESEEN DEVELOPMENT THAT MAY OCCUR DURING THE COURSE OF CONSTRUCTION.

7. ARCHITECT ASSUMES NO RESPONSIBILITY FOR ANY EXISTING STRUCTURE OR ANY UNFORESEEN PROBLEMS PRIOR TO NEW CONSTRUCTION. ARCHITECT ASSUMES NO RESPONSIBILITY FOR ANY NEW CONSTRUCTION AND/OR DEMOLITIONS OPERATIONS AND METHODS.

8. CONTRACTOR SHALL FAMILIARIZE HIMSELF WITH EXISTING CONDITIONS. ALL DIMENSIONS AND CONDITIONS SHALL BE FIELD VERIFIED. ARCHITECT SHALL BE INFORMED OF ANY DISCREPANCIES. MATCH ALL EXISTING MATERIALS, DIMENSIONS, AND CONDITIONS AS THEY APPLY.

9. ALL DIMENSIONS ARE APPROXIMATE AND ARE TO BE FIELD VERIFIED PRIOR TO START OF WORK. DO NOT SCALE DIMENSIONS FROM DRAWINGS. WRITTEN DIMENSIONS ARE TO BE FOLLOWED FOR CONSTRUCTION PURPOSES.

10. ALL CONSTRUCTION & MATERIALS SHALL BE NEW – UNLESS OTHERWISE NOTED. ALL MATERIALS SHALL BE FURNISHED AND INSTALLED BY CONTRACTOR, UNLESS OTHERWISE NOTED.

11. ALL WORK OF THE VARIOUS TRADES INVOLVED WITH THE CONSTRUCTION OF THIS PROJECT, IS TO BE PERFORMED BY CAPABLE AND REPUTABLE CONTRACTORS, LICENSED IN THE STATE OF NEW YORK AND AS REQUIRED BY THE LOCAL GOVERNING AGENCY.

12. NO WORK SHALL BE STARTED UNTIL A BUILDING PERMIT HAS BEEN SECURED AS REQUIRED BY THE APPLICABLE GOVERNING AGENCY OR AGENCIES.

13. ALL CONDITIONS AND DIMENSIONS SHALL BE VERIFIED BEFORE START OF ANY WORK AND DISCREPANCIES OR VARIATIONS TO APPROVED PLAN ARE TO BE BROUGHT TO THE ATTENTION OF THE OWNER BEFORE PROCEEDING.

14. PRIOR TO COMPLETION OF THE WORK, CONTRACTOR SHALL REMOVE FROM THE JOB SITE ALL TOOLS, SURPLUS MATERIALS, EQUIPMENT, SCRAP, DEBRIS, AND WASTE EXCEPT AS OTHERWISE NOTED BY THE OWNER.

SITE NOTES

15. CONTRACTOR/OWNER IS RESPONSIBLE FOR NOTIFYING ALL UTILITY COMPANIES AND VERIFYING LOCATION OF SAME UTILITY COMPANIES LINES, SERVICES AND OTHER POSSIBLE EQUIPMENT OF UTILITY COMPANY.

16. ALL EXISTING CONDITIONS INDICATED ON THE PLANS TO BE REMOVED OR RELOCATED ARE TO BE SO EXECUTED IN A MANNER THAT WILL NOT DISTURB ADJOINING AREAS OR CONDITIONS WHICH ARE TO REMAIN.

17. EXTREME CAUTION IS TO BE TAKEN DURING EXCAVATION AND/OR DEMOLITION. CONTRACTOR TO OBSERVE ANY VARIATIONS OR UNFORESEEN DISCREPANCIES IN THE PLANS AND REPORTED IMMEDIATELY TO THE OWNER.

18. ALL FOOTINGS TO REST ON VIRGIN SOIL HAVING A MINIMUM BEARING CAPACITY OF 3,000 P.S.I. AT 2'-0" MINIMUM BELOW THE FINISHED GRADE.

19. EARTH UNDER CONCRETE SLAB BE THOROUGHLY COMPACTED AND CLEANED OF DEBRIS, WATER AND OTHER MATTER. THE SUB-GRADE SHALL DROUGHT TO A TRUE PLANE & COMPACTED TO SOLID BEARING. ALL FILL MATERIAL SHALL BE SOIL OR SOIL-ROCK MIXTURE FREE FROM ORGANIC MATTER AND OTHER OBJECTIONABLE MATERIAL. IT SHALL CONTAIN NO ROCKS OR LUMPS OVER SIX INCHES IN GREATEST DIMENSION AND NOT MORE THAN 15% OF THE ROCKS OR LUMPS SHALL BE LARGER THAN 3" IN GREATEST DIMENSION.

20. DO NOT BACKFILL UNTIL MAIN FLOOR SYSTEMS, INCLUDING SLABS AND FLOOR DECKING, ARE INSTALLED.

21. BACKFILL AGAINST 8" POURED CONCRETE WALLS SHALL BE A MAXIMUM OF 7'-0" AND 10" CONCRETE BLOCK WALLS MAXIMUM 6'-0" ABOVE SLAB TO ADJACENT GRADE.

22. TOP 6" OF NEWLY GRADED AREAS IS TO BE TOP SOIL RAKED FREE FROM DEBRIS, STICKS, STONES OVER 2" IN SIZE AND OBJECTIONAULE MATERIAL.

23. GENERAL CONTRACTOR OR OWNER SHALL FIELD VERIFY ALL INVERT ELEVATIONS AND SEWER CONDITIONS INDICATED PRIOR TO CONSTRUCTION. ARCHITECT ASSUMES NO RESPONSIBILITY FOR INFORMATION CONTAINED IN SURVEYS ON SEWER DEPT. RECORDS.

24. FOOTING DRAINS TO BE PROVIDED WHERE REQUIRED AND APPROPRIATE THEY SHALL BE LAID IN GRAVEL BED AND PROTECTED AT TOP WITH FILTER FABRIC AND PROVIDE POSITIVE OUTFLOW TO STORM DRAIN OR DRY WELL.

25. FINISHED GRADE AND DRIVEWAY SHALL PITCH AWAY FROM THE BUILDING, SO THAT ALL SURFACE WATER FLOWS AWAY FROM IT.

26. INSTALLATION OF GAS METERS SHALL BE IN STRICT ACCORDANCE WITH LOCAL UTILITY COMPANY SPECIFICATIONS.

27. INSTALLATION OF ELECTRIC METERS SHALL BE PERFORMED IN STRICT ACCORDANCE WITH LOCAL UTILITY COMPANY SPECIFICATIONS.

28. FINISHED GRADE HEIGHT SHALL BE MINIMUM 8" BELOW ADJACENT FRAMING AND MINIMUM (IF ANY) AS PER LOCAL CODES.

CONCRETE AND MASONRY

29. NEW POURED CONCRETE TO BE MINIMUM 3000 P.S.I. COMPRESSIVE STRENGTH AT 28 DAYS. 6.0 SACKS OF CEMENT MIN. PER CUBIC YARD OF CONCRETE AND MAXIMUM 6 GALLONS OF WATER PER 94LB SACK OF CEMENT. 6 1/4 GALLONS OF WATER PER 94 POUND SACK OF CEMENT FOR AIR ENTRAINED CONCRETE. SUBMIT TESTING REPORTS PERFORMED BY APPROVED TESTING LABORATORY, AS REQUIRED BY LOCAL OFFICIALS.

30. CONCRETE DESIGN, MATERIALS, AND METHODS OF CONSTRUCTION SHALL COMPLY WITH THE APPLICABLE STANDARD 3.8 RATIO OF THE AMERICAN CONCRETE INSTITUTE. ALL MASONRY OR CONCRETE ANCHORS AND FASTNERS OF ANY KIND, TO BE GALVANIZED OR ZINC COATED.

31. BLOCK FOUNDATION WALLS TO BE REINFORCED HORIZONTALLY WITH DUR-O-WAL EVERY SECOND COURSE AND VERTICALLY WITH (4) # 5 RE-BARS EVERY FOUR FEET (BLOCK SHALL BE FILLED SOLID WITH CONCRETE AROUND REINFORCING BARS.) TOP COURSE OF BLOCK SHALL BE FILLED SOLID WITH CONCRETE AND 5/8" DIAMETER ANCHOR BOLTS SHALL BE PLACED 4'-0" TO 6'-0" O.C.

REVISED 12/23/2021

PERGOLA RESIDENCE TWO-STORY ADDITION

38 E. CRESCENT AVENUE ALLENDALE, NEW JERSEY

PROJECT 181287
APRIL 18, 2019

HARRY J. GOLDSTEIN
ARCHITECT

N.J.S. LICENSE NO. AI 14353
NOT VALID UNLESS SIGNED & SEALED

HARRY J. GOLDSTEIN
ARCHITECT
DESIGN & DEVELOPMENT

4 REGINA ROAD
MONSEY, NEW YORK 10952
(845) 356-7942 (914) 393-5787

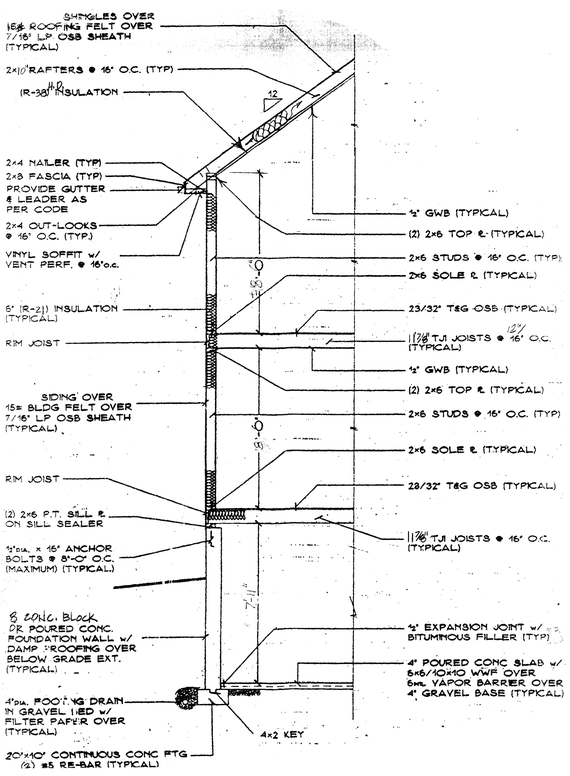

TYPICAL WALL SECTION

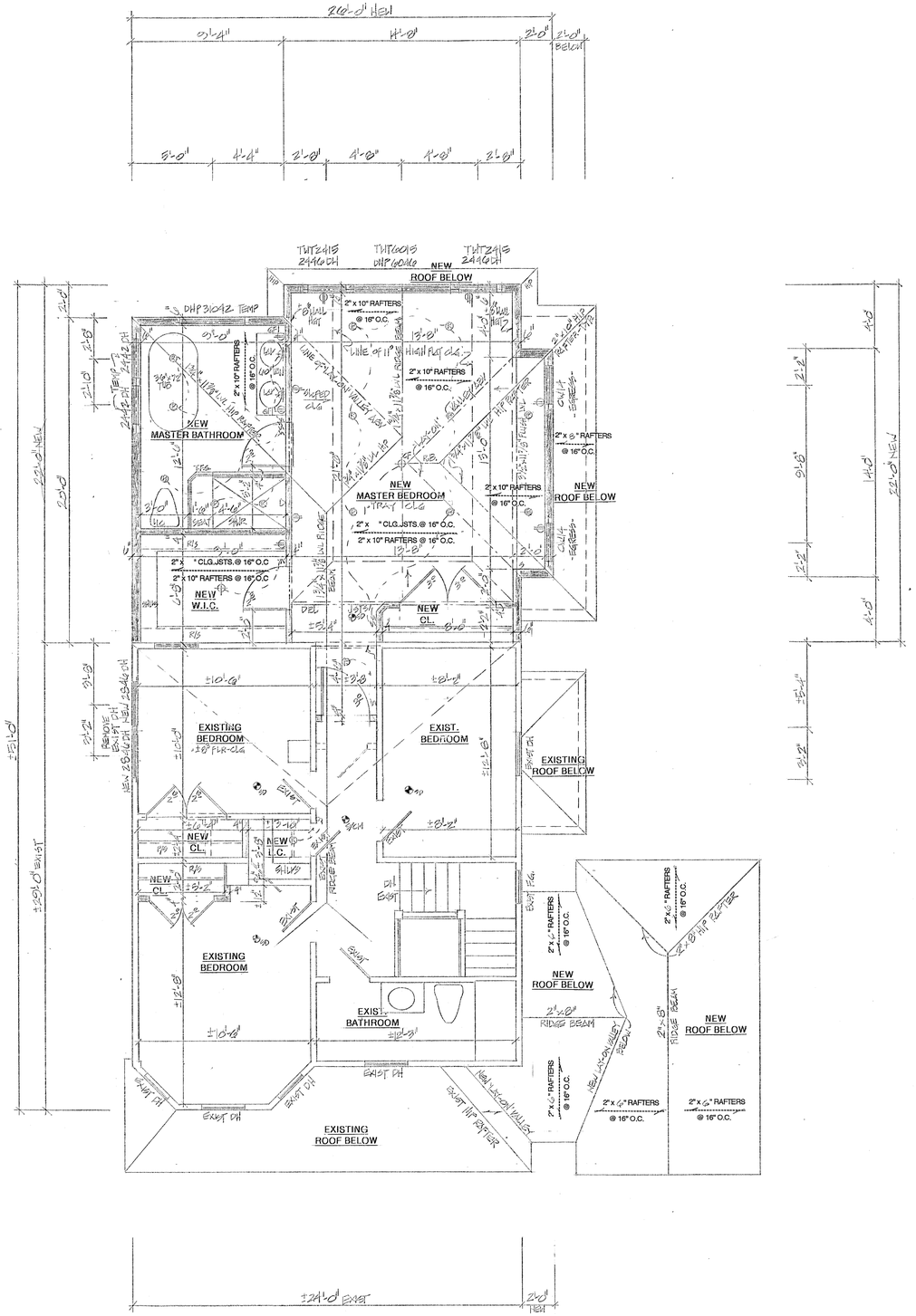

SECOND FLOOR PLAN

EXIST.S.F. :600; NEW S.F. :538
TOTAL SECOND FLR. S.F.:1138

SCALE: 1/4"=1'-0"

NEW OVERALL TOTAL
LIVING S.F. :2345

GENERAL SPECS.CONTIN.

FRAMING

32. ALL LUMBER MATERIALS USED IN THE BUILDING SHALL BE GOOD, SOUND, DRY MATERIAL, FREE FROM ROT, LARGE AND LOOSE KNOTS, SHAKES, AND OTHER IMPERFECTIONS WHEREBY THE STRENGTH MAY BE IMPAIRED AND OF SIZES INDICATED ON DRAWINGS. STUDS, SILLS, POSTS, LINTELS AND RAFTERS SHALL BE HEM-FIR (19% MAXIMUM GRADE EXCEPT IF NOTED OTHERWISE HEREINAFTER IN THIS SPECIFICATION OR ON THE DRAWINGS. THE MIN. UNIT STRESS FOR HEM-FIR SHALL BE:

FIBER STRESS (FB) = 1500 PSI
HORIZONTAL SHEAR (FV) = 95 PSI
MODULUS OR ELASTICITY (E) = 1,400,000 PSI

WHERE INDICATED ON THE DRAWINGS WITH THE NOTATION FB=1500 ONLY DOUGLAS FIR-LARCH-NORTH (19% MAX. MOISTURE) NO. 1 GRADE SHALL BE USED WITH THE FOLLOWING MIN. UNIT STRESSES:

FIBER STRESS (FB) = 1500 PSI
HORIZONTAL SHEAR (FV) = 95 PSI
MODULUS OR ELASTICITY (E) = 1,800,000 PSI

CALCULATED DESIGN LOADS (ADD 10 PSI DEAD LOAD ALL SPANS):

ROOF	30 PSI	LIVE LOAD (40)
FLOORS	40 PSI	LIVE LOAD (50)
ATTIC	20 PSI	LIVE LOAD (30)
DECKS	60 PSI	LIVE LOAD (70)

33. ALL SILL PLATES IN CONTACT WITH CONCRETE OR MASONRY WALLS, SLABS, ETC. SHALL BE PRESSURE TREATED LUMBER (UNLESS OTHERWISE NOTED). SILL SEAL SHALL BE OWENS CORNING SILL SEALER (OR APPROVED EQUAL). TERMITE SHIELD SHALL BE INSTALLED WHERE REQUIRED BY SITE CONDITIONS AND BUILDING CODES.

34. DOUBLE JOISTS SHALL BE INSTALLED UNDER ALL PARTITIONS RUNNING PARALLEL WITH SPANS AND AROUND ALL FLOOR OPENINGS. DOUBLE STUDS SHALL BE INSTALLED AROUND ALL WALL OPENINGS. ONE ROW OF SOLID BRIDGING AT MID-HEIGHT WITHIN ALL INTERIOR BEARING WALLS. DOUBLE FRAMING AROUND ALL SKYLIGHTS. ROOF AND FLOOR TRUSSES (TJI) AND L.V.L. (MICRO-LAM) TO BE INSTALLED IN STRICT COMPLIANCE WITH MANUFACTURER'S SPECIFICATIONS. FLOOR JOISTS SHALL RECEIVE CROSSBRIDGING AT 7'-0" O.C. MAXIMUM SPACING.

35. INTERIOR SUBFLOOR SHALL BE 3/4" TONGUE AND GROOVE SHEATHING GLUED AND NAILED (OVER PREFABRICATED FLOOR TRUSSES) OR TWO LAYERS OF 1/2" PLYWOOD LAID PERPENDICULAR TO EACH OTHER, WITH BUILDING PAPER BETWEEN LAYERS; GLUED AND NAILED TO FLOOR JOISTS. EXTERIOR SHEATHING SHALL BE 1/2" EXTERIOR GRADE APPLIED HORIZONTALLY WITH VERTICAL JOINTS STAGGERED 4'0". ROOF SHEATHING SHALL BE 1/2" EXTERIOR GRADE PLYWOOD, UNLESS OTHERWISE NOTED.

36. EXTERIOR WALLS SHALL BE 2" X 6" WOOD FRAMING. INTERIOR PARTITIONS SHALL BE 2"X 4" WOOD FRAMING. STUDS SHALL BE PLACED AT 16" ON CENTER (UNLESS OTHERWISE NOTED) AND RECEIVE BLOCKING AT MID-HEIGHT AS REQUIRED. STUDS AT GABLE ENDS UNDER CATHEDRAL CEILINGS SHALL RUN FULL HEIGHT FROM SOLE PLATE TO ROOF AND SHALL RECEIVE SOLID BLOCKING AT 6'-0" ABOVE FLOOR. ALL BEARING WALLS AND PARTITIONS SHALL RECEIVE BLOCKING AT MID-HEIGHT.

37. HEADERS OVER ALL DOORS, WINDOWS, AND OTHER OPENINGS UNDER 6'-0" SHALL BE (2) 2" X 10" (UNLESS OTHERWISE NOTED). HEADER OPENINGS 6'-0" TO 8'-0" SHALL RECEIVE (3) 2" X 10" OR (2) 2" X 12" HEADERS IN EXTERIOR WALLS, UNLESS OTHERWISE NOTED.

38. ALL EXTERIOR DECKS SHALL BE FRAMED WITH PRESSURE TREATED LUMBER (UNLESS OTHERWISE NOTED). LUMBER SHALL HAVE THE FOLLOWING MINIMAL STRESS: F 1000 PSI AND E 1,200,000 PSI; AND SHALL BE SOUTHERN YELLOW PINE OR APPROVED EQUAL. GALVANIZED HEAVY DUTY POST BASES SHALL BE PROVIDED AT BASE OF ALL WOOD COLUMNS. DECK JOISTS SHALL RECEIVE DIAGONAL CROSS BRACE OR DIAGONAL DECKING. DECKING AND RAILS TO BE NON-TOXIC LUMBER, I.E. DOUGLAS FIR, CEDAR, OR EQUAL. RAILINGS TO BE CONSTRUCTED AT 36" HEIGHT AND WITH MAXIMUM 6" SPHERE OPENING, AS PER CODES.

39. ROOFING MATERIAL SHALL BE MINIMUM 20 YEAR FIBERGLASS SHINGLES (OWENS CORNING OR APPROVED EQUAL) OVER 15LB ROOFING FELT. VALLEY FLASHING AND OTHER APPROPRIATE FLASHING SHALL BE PROVIDED AS REQUIRED. ICE AND WATER SHIELD SHALL BE INSTALLED AS REQUIRED.

40. FASCIA BOARDS SHALL BE SCARFED AT A 45 DEGREE ANGLE OR 90 DEGREE ANGLE. FASCIA BOARDS SHALL BE COMMON PINE WRAPPED IN ALUMINUM, UNLESS OTHERWISE NOTED.

41. ALUMINUM GUTTERS AND LEADERS SHALL BE PROVIDED AS REQUIRED. SPLASH BLOCKS SHALL BE PROVIDED AT OUTLETS UNLESS OTHER PROVISIONS FOR WATER DISPERSION ARE PROVIDED. ALL WATER MUST DRAIN AWAY FROM STRUCTURE SO AS NOT TO CONTRIBUTE TO GROUND WATER SEEPAGE AT FOUNDATION.

DOORS AND WINDOWS

42. WINDOWS SHALL BE SIZE, TYPE AND MFG. AS INDICATED ON PLANS, WITH SCREENS AND HARDWARE PROVIDED. GLAZING LESS THAN 18" ABOVE FLOOR SHALL BE TEMPERED. OPTIONS SUCH AS GLAZING, GRILLES, COLORS, ETC., SHALL BE SELECTED BY OWNER AND/OR BUILDER PRIOR TO CONSTRUCTION. HEAD HEIGHT SHALL BE 6' – 10", UNLESS OTHERWISE NOTED.

43. EXTERIOR DOORS TO BE OF THE MANUFACTURER, TYPE, SIZE, AND STYLE AS INDICATED ON THE DRAWINGS. ANY MANUFACTURERS OPTIONS SHALL BE THE RESPONSIBILITY OF THE OWNER/CONTRACTOR UNLESS OTHERWISE INDICATED ON THE DRAWINGS. ALL DOORS SHALL BE 6' – 8" HEIGHT UNLESS OTHERWISE NOTED. PROVIDE WEATHER STRIP SADDLE ON ALL EXTERIOR DOORS. PROVIDE ALUMINUM SADDLE ON ALL INTERIOR PERSONNEL GARAGE DOORS.

PLUMBING

44. ALL PLUMBING WORK SHALL BE IN ACCORDANCE WITH LOCAL HEALTH DEPARTMENT REQUIREMENTS AND SHALL BE SUBJECT TO THE APPROVAL OF THE PLUMBING INSPECTOR. PLUMBING WORK SHALL BE PROVIDED BY CONTRACTOR. BATHROOM FIXTURES SHALL BE KOHLER, AMERICAN STANDARD, OR APPROVED EQUAL. OWNER SHALL SELECT FIXTURES AND COLORS. PLUMBING FIXTURES TO BE MANUFACTURED BY_____ (OR EQUAL).

ELECTRICAL

45. ALL ELECTRICAL WORK SHALL CONFORM COMPLETELY TO THE REQUIREMENTS OF THE N.J.S.P.U. AND LOCAL UTILITY COMPANY. GROUND FAULT INTERRUPTS, DUPLEX RECEPTACLES, ETC., SHALL BE INSTALLED AS REQUIRED ACCORDING TO KITCHEN AND/OR BATH LAYOUTS AND CODE REQUIREMENTS.

HEATING / VENTILATING / AIR CONDITIONING

46. ALL HEATING AND AIR CONDITIONING WORK SHALL CONFORM COMPLETELY TO THE REQUIREMENTS OF THE LOCAL AND STATE BUILDING CODES. THE HEATING AND AIR CONDITIONING SYSTEM SHALL MEET ALL REQUIREMENTS OF THE NEW JERSEY STATE ENERGY CONSERVATION CONSTRUCTION CODE AS THEY APPLY.

THERMAL AND MOISTURE PROTECTION

47. APPLY FOUNDATION DAMPROOFING OR WATERPROOFING ON ALL BACKFILL FACES OF WALLS BELOW EARTH GRADE.

48. PROVIDE 15LB BUILDING FELT, "TYVEK", "TYPAR", OR EQUAL, BEHIND ALL SIDING, WINDOW, AND DOOR CASINGS, MAIL TRIMS, ETC.

49. ALL EXTERIOR OPENINGS SHALL BE PROPERLY FLASHED, CAULKED, WEATHER STRIPPED OR OTHERWISE PROPERLY SEALED.

50. ALL EXTERIOR WALLS AND ROOFS SHALL BE INSULATED AS INDICATED ON PLANS AND AS PER CODES. INSULATION SHALL BE FOIL OR KRAFT FACED FIBERGLASS BATT INSULATION. RIDGE VENTS SHALL BE INSTALLED IN CATHEDRAL CEILINGS AS REQUIRED.

INTERIOR

51. ALL GYPSUM BOARD SHALL BE SCREWED ON CEILINGS AND/OR NAILED TO WALLS, TO RECEIVE THREE COATS OF SPACKLE, FINISHED TO RECEIVE TWO COATS OF PAINT, AND ONE COAT OF PRIMER, COLORS BY OWNER. BATHROOMS SHALL RECEIVE WATERPROOF SHEETROCK BEHIND TILE AREAS, AND WONDERBOARD OR APPROVED EQUAL BEHIND TILE IN BATH AND SHOWER AREAS.

52. FLOORING, TRIM, CLOSET SHELVING, CABINETRY, APPLIANCES, FIXTURES, HARDWARE, ETC., SHALL BE SELECTED BY OWNER AND INSTALLED BY BUILDER IN ACCORDANCE WITH MANUFACTURER'S SPECIFICATIONS.

53. INTERIOR DOORS SIZED AS INDICATED ON DRAWINGS, STYLE AND TYPE BY OWNER/CONTRACTOR.

54. CERAMIC TILE OR MARBLE FLOORS IN THE AREA INDICATED ON PLANS SHALL BE INSTALLED IN A "MUD" BASE.

55. OAK HARDWARE FLOORS SHALL BE INSTALLED MINIMUM 3 DAYS AFTER DELIVERY AND BUILDING TO BE HEATED. OAK FLOORS TO RECEIVE TWO COATS OF POLYURETHANE, GYM SEAL OR EQUAL.

56. STAIRS TO BE AS INDICATED ON DRAWINGS WITH A MINIMUM OF 9" TREAD, AND A MAXIMUM RISE OF 8". MATERIAL AND STYLE BY OWNER, UNLESS OTHERWISE INDICATED, AND SHALL BE INSTALLED AS PER STATE AND LOCAL CODES. ALL RAILINGS TO BE 36" HIGH (MINIMUM). STYLE AND MATERIAL TO BE SELECTED BY OWNER, AND SHALL CONFORM TO ALL STATE AND LOCAL CODES. (6" SPHERE MAXIMUM OPENING). ALL EXPOSED WOOD AND TRIM TO RECEIVE ONE COAT OF STAIN AND OPTIONAL TWO COATS POLYURETHANE.

REVISED 12/23/2021

PERGOLA RESIDENCE TWO-STORY ADDITION

38 E. CRESCENT AVENUE ALLENDALE, NEW JERSEY

PROJECT 181287
APRIL 18, 2019

HARRY J. GOLDSTEIN
ARCHITECT

N.J.S. LICENSE NO. AI 14353
NOT VALID UNLESS SIGNED & SEALED

HARRY J. GOLDSTEIN
ARCHITECT
DESIGN & DEVELOPMENT

4 REGINA ROAD
MONSEY, NEW YORK 10952
(914) 356-7942 (914) 393-5787

FRONT ELEVATION

SCALE: 1/4"=1'-0"

RIGHT SIDE ELEVATION

REAR ELEVATION

LEFT SIDE ELEVATION

USE GROUP: AA-RESIDENTIAL
CONSTRUCTION CLASS: 5B
NEW ADDITIONAL LIVING AREA: 1090 S.F.
NEW ADDITIONAL CONTAINED VOLUME: 9,465 C.F.

STATE OF NEW JERSEY ADOPTED CODES AND STANDARDS

INTERNATIONAL RESIDENTIAL CODE- NJ EDITION, 2018
NATIONAL ELECTRIC CODE, 2017
NATIONAL STANDARD PLUMBING CODE, 2018
INTERNATIONAL ENERGY CONSERVATION CODE, 2018 (RESIDENTIAL)
INTERNATIONAL MECHANICAL CODE, 2018
INTERNATIONAL FUEL GAS CODE, 2018
2018 RESIDENTIAL PRESCRIPTIVE PACKAGE

PERGOLA RESIDENCE TWO-STORY ADDITION

38 E. CRESCENT AVENUE ALLENDALE, NEW JERSEY

PROJECT 181287
APRIL 18, 2019

REVISED 12/23/2021

HARRY J. GOLDSTEIN
ARCHITECT

N.J.S. LICENSE NO. AI 14353
NOT VALID UNLESS SIGNED & SEALED

HARRY J. GOLDSTEIN
ARCHITECT
DESIGN & DEVELOPMENT

4 REGINA ROAD
MONSEY, NEW YORK 10952
(845) 356-7942 (914) 393-5787

Van Cleef
ENGINEERING WITH FOCUS

111 Howard Boulevard, Suite 110
Mt. Arlington, NJ 07856
862-284-1100

MEMORANDUM

TO: Borough of Allendale Land Use Board
L. Garofalo, Land Use Administrator / C. Botta, Board Attorney

FROM: Michael Vreeland, Board Engineer

CC: V. Pergola & A. Peterson, Applicant / B. Whitaker, Applicant's Attorney / H. Goldstein, Applicant's Architect / C. Lantelme, Applicant's Engineer

RE: 38 East Crescent Avenue - Variance Application
Block 511 Lot 7
Allendale Borough
VCEA Project No. ALN-1001.041

DATE: April 4, 2022

We are in receipt of the following information pertaining to the above-referenced application:

A. Application with Attachments;

B. Plan entitled, "Site Plan For Vincent Pergola, Lot 7 Block 511 38 East Crescent Avenue, Borough Of Allendale, Bergen County, N.J." The plan prepared by Lantelme, Kurens & Associates, P.C. (Christopher Lantelme, PE, LS) is dated with a latest revision date of March 7, 2022; and

C. Plans entitled, "Pergola Residence Two-Story Addition, 38 E. Crescent Avenue, Allendale, New Jersey". The plans prepared by Harry J. Goldstein (Harry J. Goldstein, RA) consist of 3 sheet and are dated with a latest revision date of December 23, 2021.

We have reviewed the information along with the Borough Code (Code), visited the site, and offer the following comments:

1. INTRODUCTION

The subject property is currently developed with a two-story dwelling, detached garage and associated amenities. The application and plans propose to construct additions and renovations to the existing dwelling (including rear two-story addition and side attached car port). The subject property is located within Allendale's AA (Residential) Zone.

The Applicant is seeking variance relief for conflicts with §270-37A, §270-54A and §270-54C of the Code.

2. TECHNICAL COMPLETENESS

We have reviewed this application for technical completeness in accordance with the Application Checklist. Based on this review we believe the Applicant has addressed each of the applicable technical checklist items.

We defer to the Land Use Administrator and the Board Attorney regarding administrative and legal completeness matters.

3. ZONING

We have reviewed this application in accordance with the requirements of the Borough's Code. Based on this review we find the following:

3.1. Non-Conforming Conditions:

3.1.1. §270-37A(4) – Additions to Nonconforming Structures
Comment: Proposed alteration and improvements do not comply with development regulations.

3.1.2. §270-54A – Height
Comment: The existing dwelling height of 35.2 ft exceeds the maximum allowable height of 35 ft. The proposed improvements increase the height to 37.1 ft.

3.1.3. §270-54B –Front Yard
Comment: The existing dwelling encroaches ±8.5 ft into the required 40 ft front yard setback. The subject application does not appear to alter this condition.

3.1.4. §270-54C –Side Yard
Comment: The existing dwelling encroaches ±14.3 ft into the required 20 ft side yard setback (left). The subject application does not appear to alter this condition.

The application will expand the dwelling by connecting the proposed car port to the existing dwelling. The dwelling will encroach ±6.5 ft into the required side yard setback (right).

3.1.5. §270-54E – Lot Area
Comment: The existing lot area is ±15,183 sf less than the required 20,000 sf area. The subject application does not appear to alter this conditions.

3.1.6. 270-54F – Lot Width
Comment: The existing lot width is ±41.84 ft less than the required 100 ft width. The subject application does not appear to alter this condition.

3.2. Discussion

Since this proposal does not meet the requirements noted above, the Applicant must seek relief from the Board pursuant to the Municipal Land Use Law under N.J.S.A. 40-55D-70c.

The Applicant has requested "C" variances in conjunction with this proposal.

3.2.1. "C(1)" or "Hardship" Variances
In judging an application by the C(1) criteria, the core question presented to the Board is whether there has been a showing of (1) peculiar and exceptional practical difficulties to, or (2) exceptional and undue hardship upon, the Applicant arising out of (a) the exceptional narrowness, shallowness or shape of the subject property, or (b) by reason of exceptional topographic conditions or physical features uniquely affecting the subject property, or (c) by reason of an extraordinary and exceptional situation uniquely affecting the subject property or the structures lawfully existing thereon. In all cases the alleged hardship must relate to a specific piece of property.

3.2.2. "C(2)" or "Benefits v. Detriments" Variances
In judging an application by the C(2) criteria, the core questions presented to the Board is whether the grant of a variance would promote or advance the purposes of the Municipal Land Use Law and the benefits of such deviation outweigh any detriment.

As in all variance cases, the Applicant bears the burden of proving both the positive and negative criteria. Relief cannot be granted unless it can be granted without substantial detriment to the public good and unless it will not substantially impair the intent and purpose of the zone plan and zoning ordinance.

We specifically note that it is the Applicant's burden to show the special reasons and satisfy the negative criteria. As such, the Applicant's qualified professionals will need to present additional information concerning the aforementioned issues as well as the positive and negative elements pertaining to the subject proposal.

4. RENOVATIONS

4.1. We recommend the Applicant provides testimony regarding the appearance of the proposed addition and alterations;

4.2. We assume the existing landscaping will remain. This should be confirmed by the Applicant;

4.3. The plan does not include exterior lighting. The Applicant should confirm that additional lighting is not proposed or needed;

4.4. Should the Board approve this application:

4.4.1. The Applicant will need to obtain a Soil Movement Permit if more than 50 cy of soil will be moved;

4.4.2. The Applicant will need to obtain Plot Plan Approval since the project includes an expansion a footprint greater than 500 sf;

4.4.3. A tree removal permit will need to be obtained for trees to be removed;

4.4.4. Soil erosion and sediment control measures will need to be provided. The measures need to be in place prior to initiating soil disturbance and maintained until the area of disturbance has been permanently stabilized; and

4.4.5. We recommend an “As-Built Plan” be required.